4STAR:

Spectrometer for Sky-Scanning, Sun-Tracking Atmospheric Research

Collaboration involving:
NASA Ames, Battelle PND, NASA GSFC

NASA Ames: Phil Russell, Jens Redemann, Steve Dunagan, Roy Johnson:

Battelle PND: Connor Flynn, Beat Schmid, Evgueni Kassianov

NASA GSFC: Alexander Sinyuk, Brent Holben, & AERONET Team

4STAR:
Spectrometer for Sky-Scanning, Sun-Tracking

Atmospheric Research

AERONET-like

- Phase function
- Size mode distributions
- $n_{re}(\lambda)$, $n_{im}(\lambda)$
- Single-scattering albedo
- Asymmetry parameter
- Shape
- Hence aerosol type

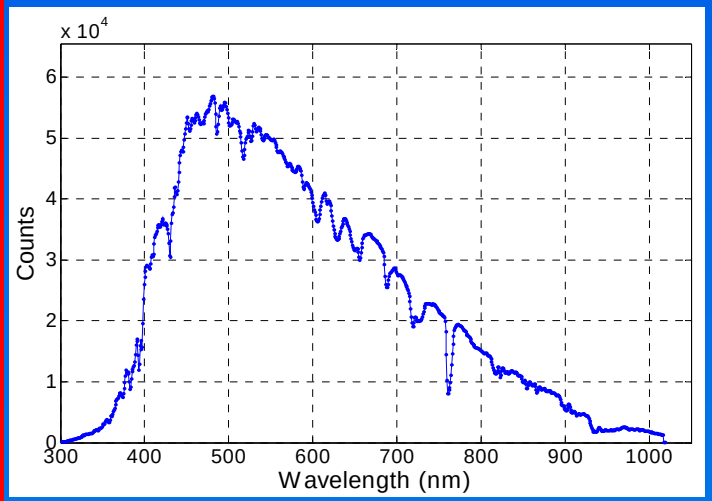

Improve H_2O, O_3
Add NO_2
Thus improve AOD

Simultaneous spectra yield airborne profiles of aerosol type via Aeronet-like retrievals

AATS-14 like retrievals of column amount and profiles of aerosol, H_2O and O_3

AATS (Team) provides a bridge between orbital and various suborbital sensors

- Satellite validation (aerosol, H_2O, O_3):
  - AIRS (1*), ATSR-2 (2), AVHRR (4), GMS (1), GOES (2), MISR (4), MODIS (10), POAM (2), SAGE-3 (2), TOMS (2), airborne satellite simulators (2)
- Airborne *in situ* aerosol (13)
- Lidars: surface (10), airborne (4), space (0)
- Radiative Forcing with Pilewskie SSFR (4)
- Atmospheric Correction (1)
- <u>Model predictions of aerosol profiles</u> (1)
- …

(*# of peer-reviewed papers: >80 since 1987. >70 since 1996

4STAR and its Use

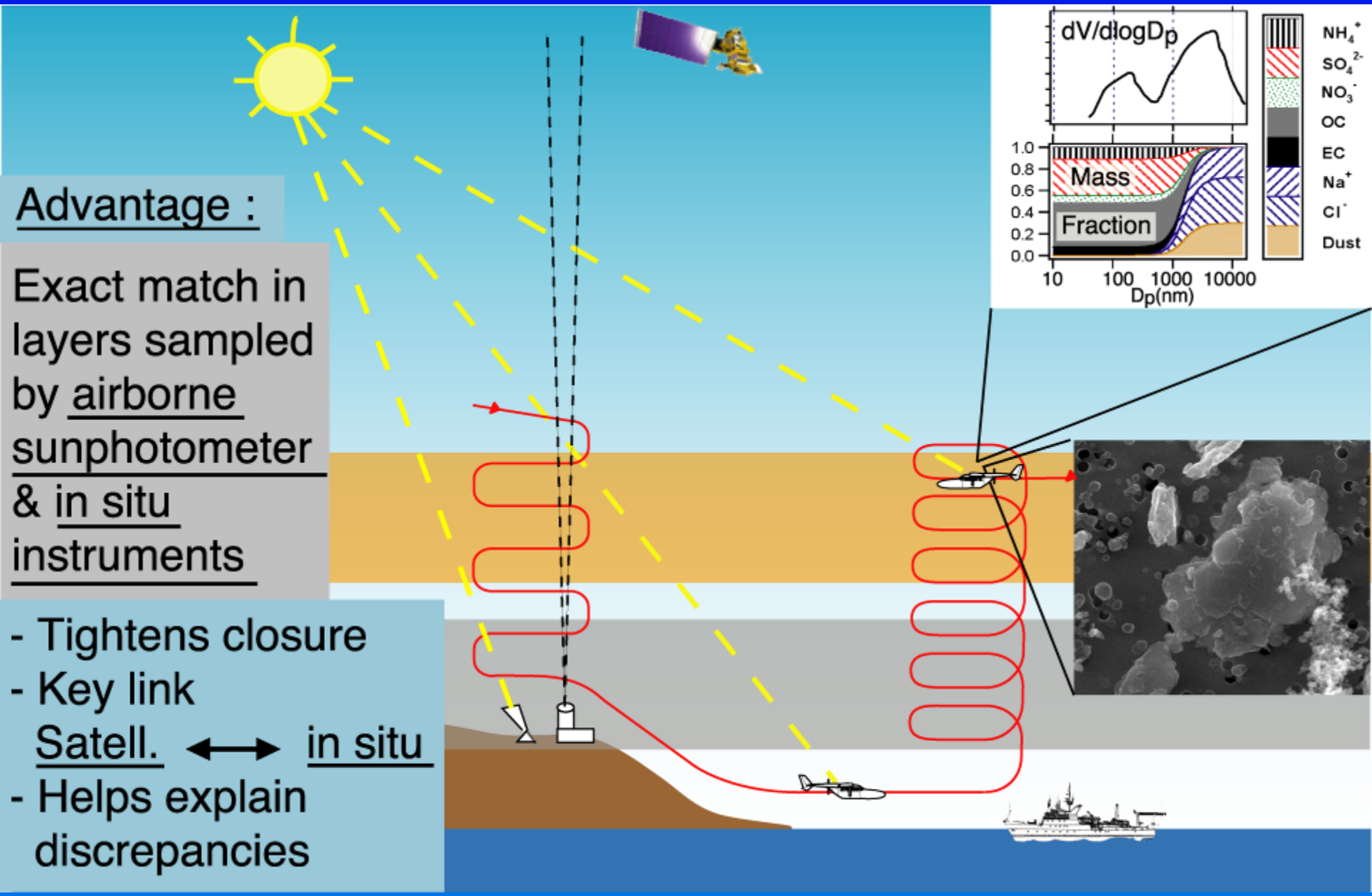

Advantage :

Exact match in layers sampled by airborne sunphotometer & in situ instruments

- Tightens closure
- Key link Satell. ⟷ in situ
- Helps explain discrepancies

Spectrometer for Sky-Scanning, Sun-Tracking Atmospheric Research (4STAR)

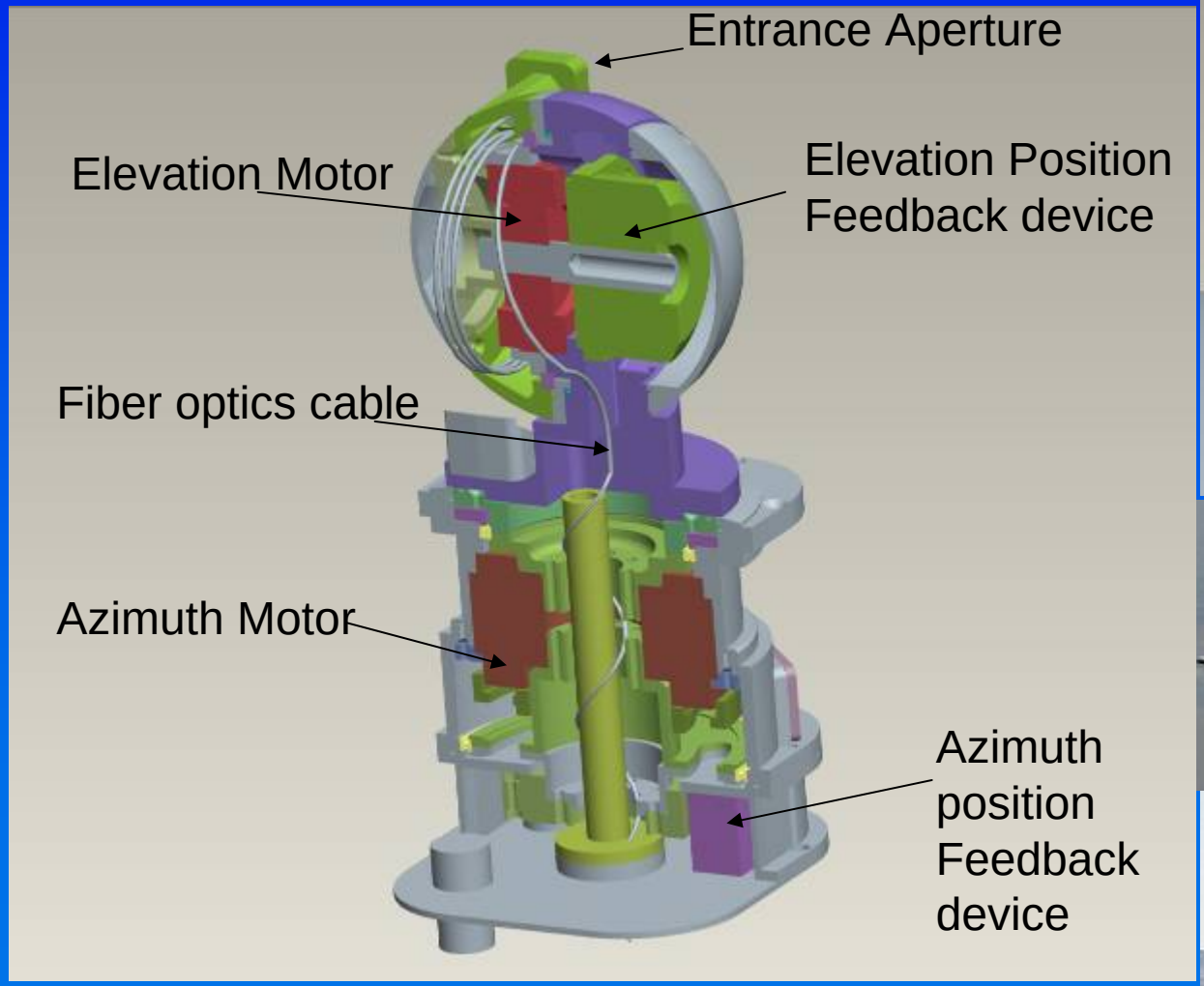

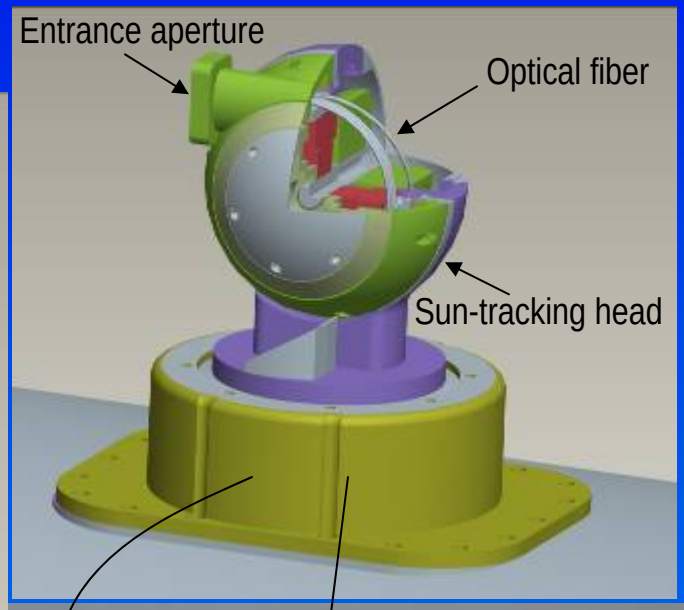

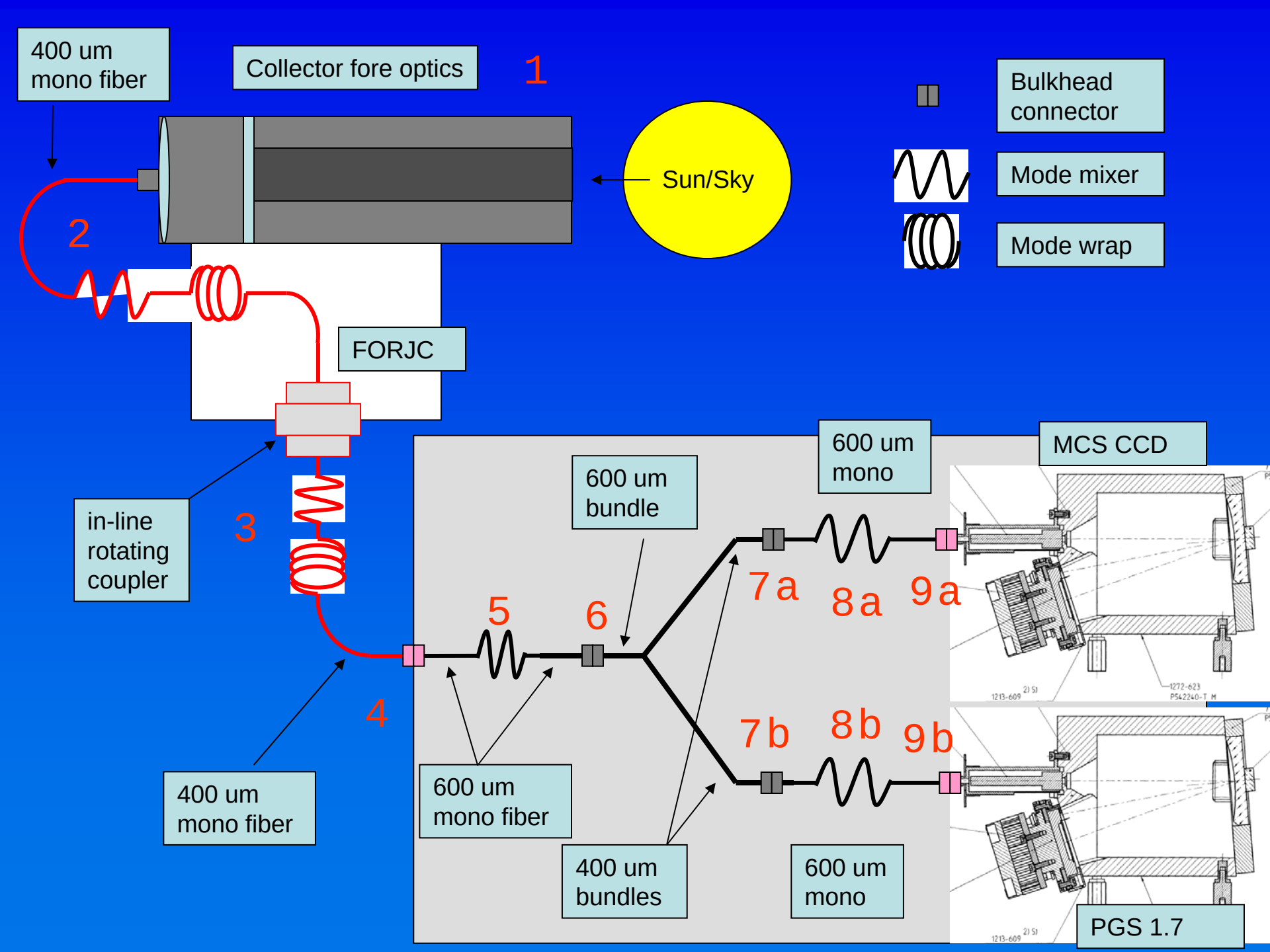
400 um mono fiber
Collector fore optics
1
Sun/Sky
Bulkhead connector
Mode mixer
Mode wrap
2
FORJC
in-line rotating coupler
3
4
400 um mono fiber
5
600 um bundle
6
600 um mono fiber
400 um bundles
7a
8a
9a
600 um mono
MCS CCD
7b
8b
9b
600 um mono
PGS 1.7

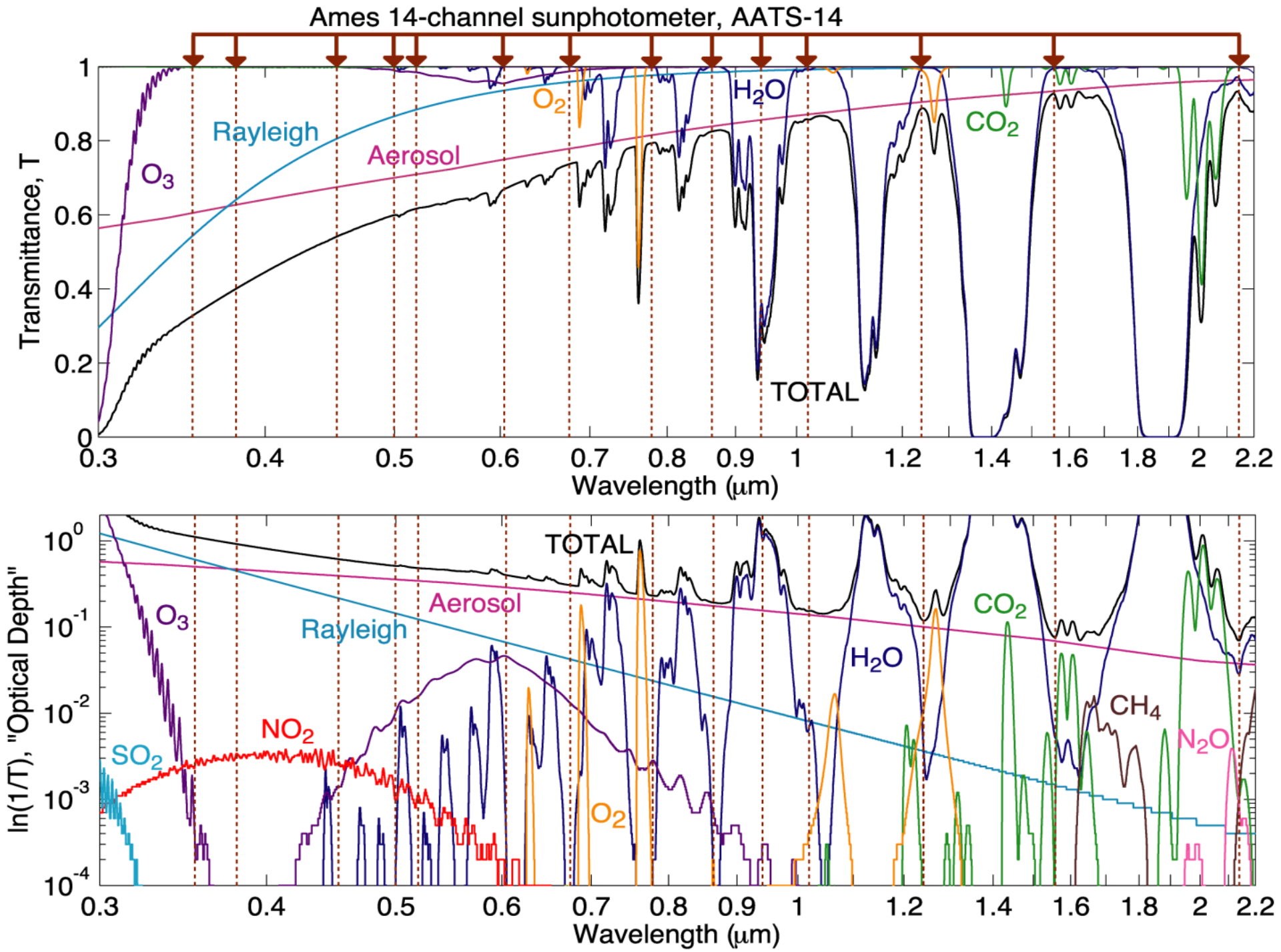
Ames 14-channel sunphotometer, AATS-14
Transmittance, T
Wavelength (μm)
O3
Rayleigh
Aerosol
O2
H2O
CO2
TOTAL
ln(1/T), "Optical Depth"
SO2
NO2
CH4
N2O

Key Technological Hurdles

1. Maintaining calibration (output counts per input radiance or irradiance) to 1% over a period of months

2. Demonstrating stray light rejection to permit measuring skylight within a few degrees of the sun

3. Devising a fiber optic coupling that maintains 1% calibration stability with as many as possible of the following desirable characteristics:
   a) detachable during assembly before calibration;
   b) detachable between calibration and scientific measurements;
   c) rotatable during measurements.

Ground Prototype (4STAR-Ground)

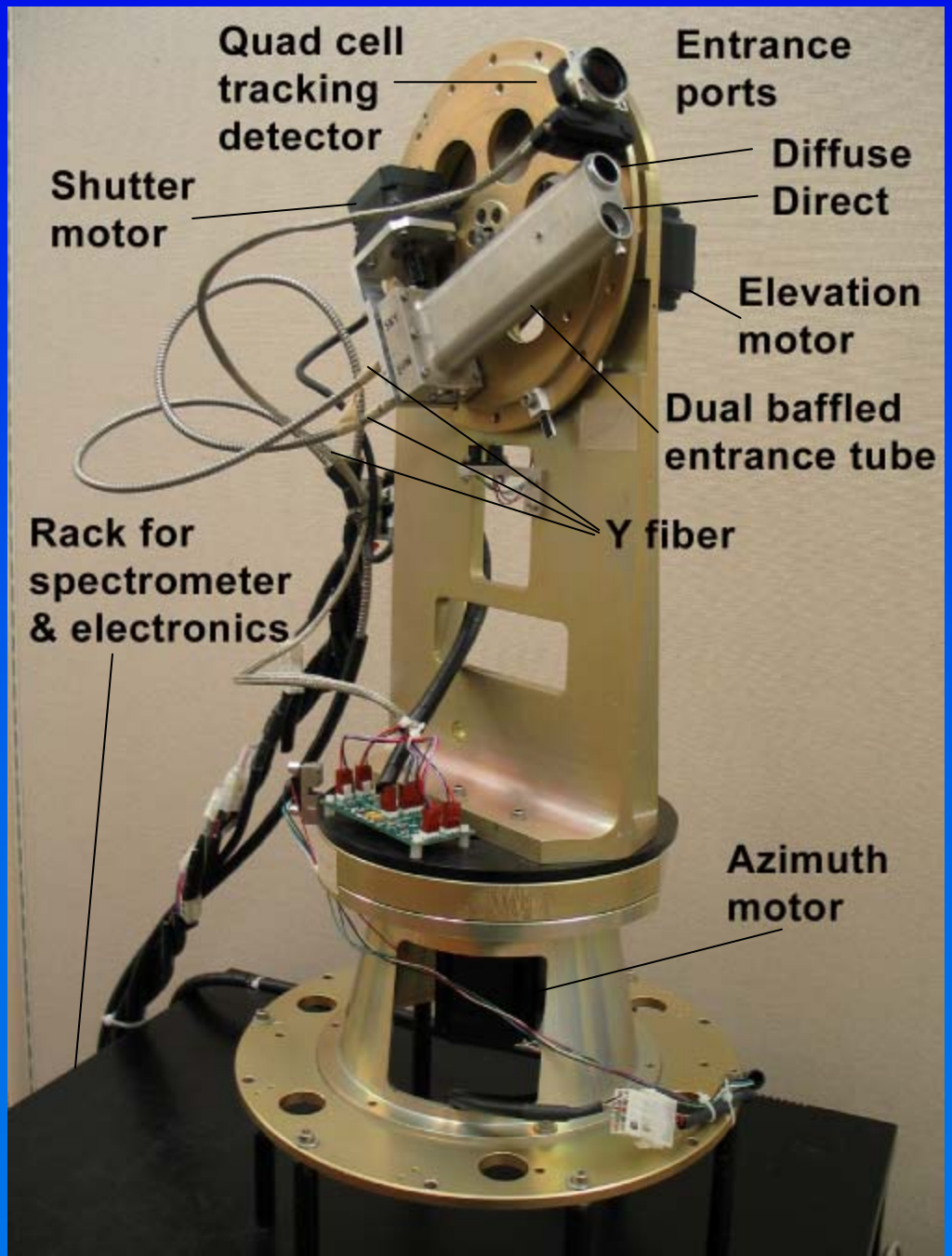

Zeiss MCS CCD spectrometer

Quasi-monolithic, no moving parts, ceramic body, Range: 250-1016 nm, Resolution ~ 2 nm

SMA Connectors, 430(?) um multifiber

21 Fiber

20 Fiber

SKY

SUN

18 fibers in a circular pattern reshaped into a slit entrance to grating.

41 Fiber

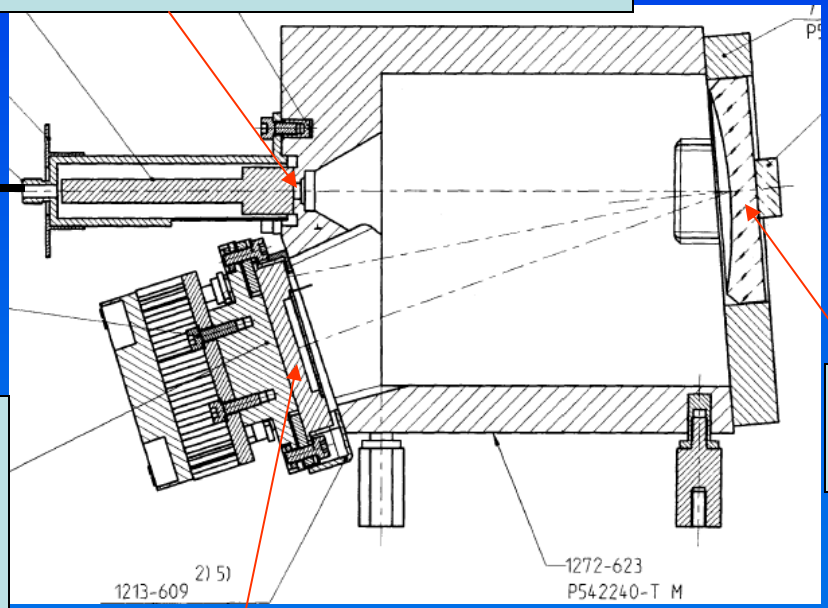

Grating and Mirror

Connected via SMA with threaded ferrule removed, held with set screw in locating groove.

41 fiber exit is ~600 um.

SPECTROMETER

CCD with 2nd order blocking.

AATS-14

4STAR-Ground

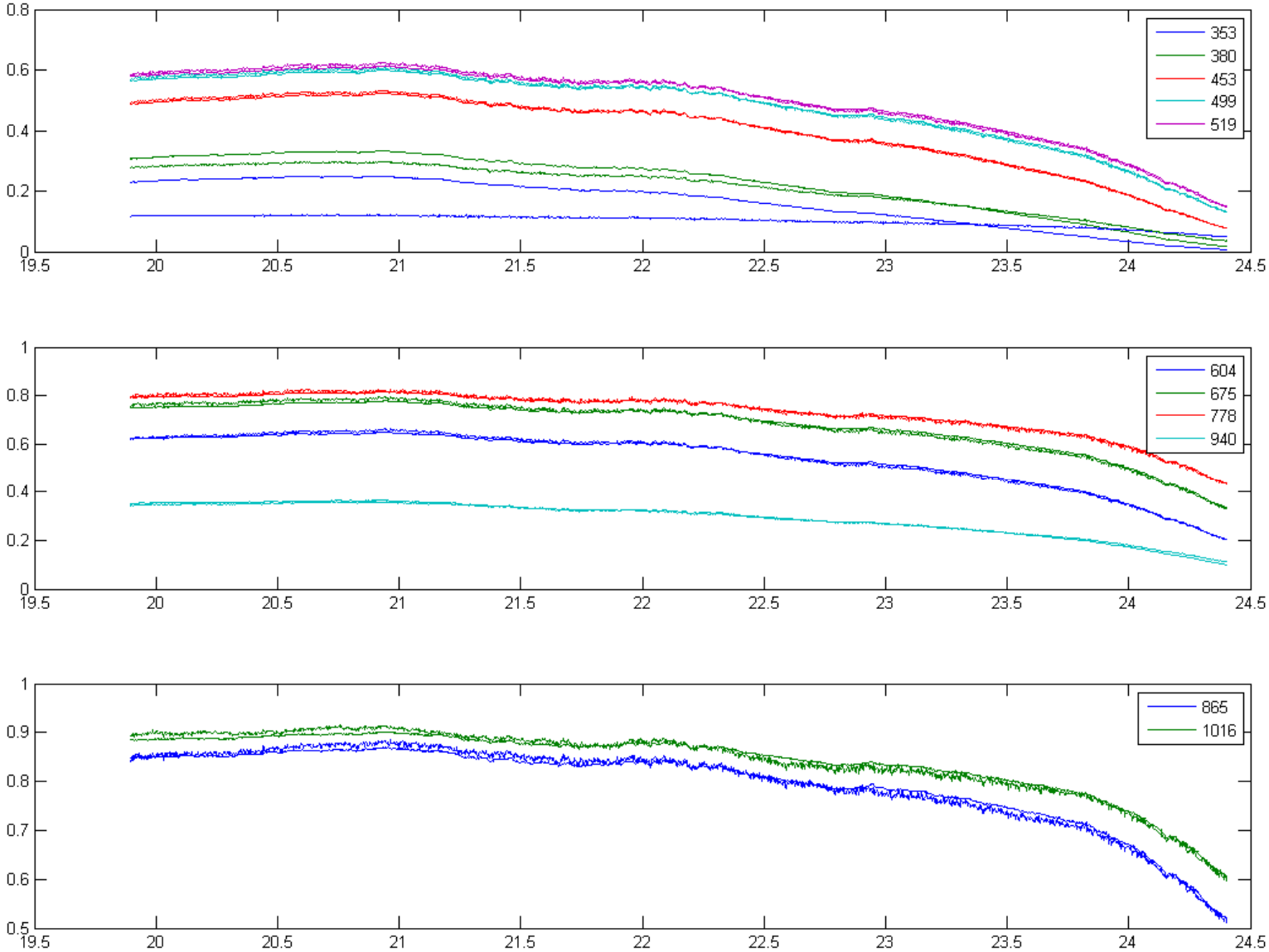
353
380
453
499
519
604
675
778
940
865
1016

Radiance Calibration

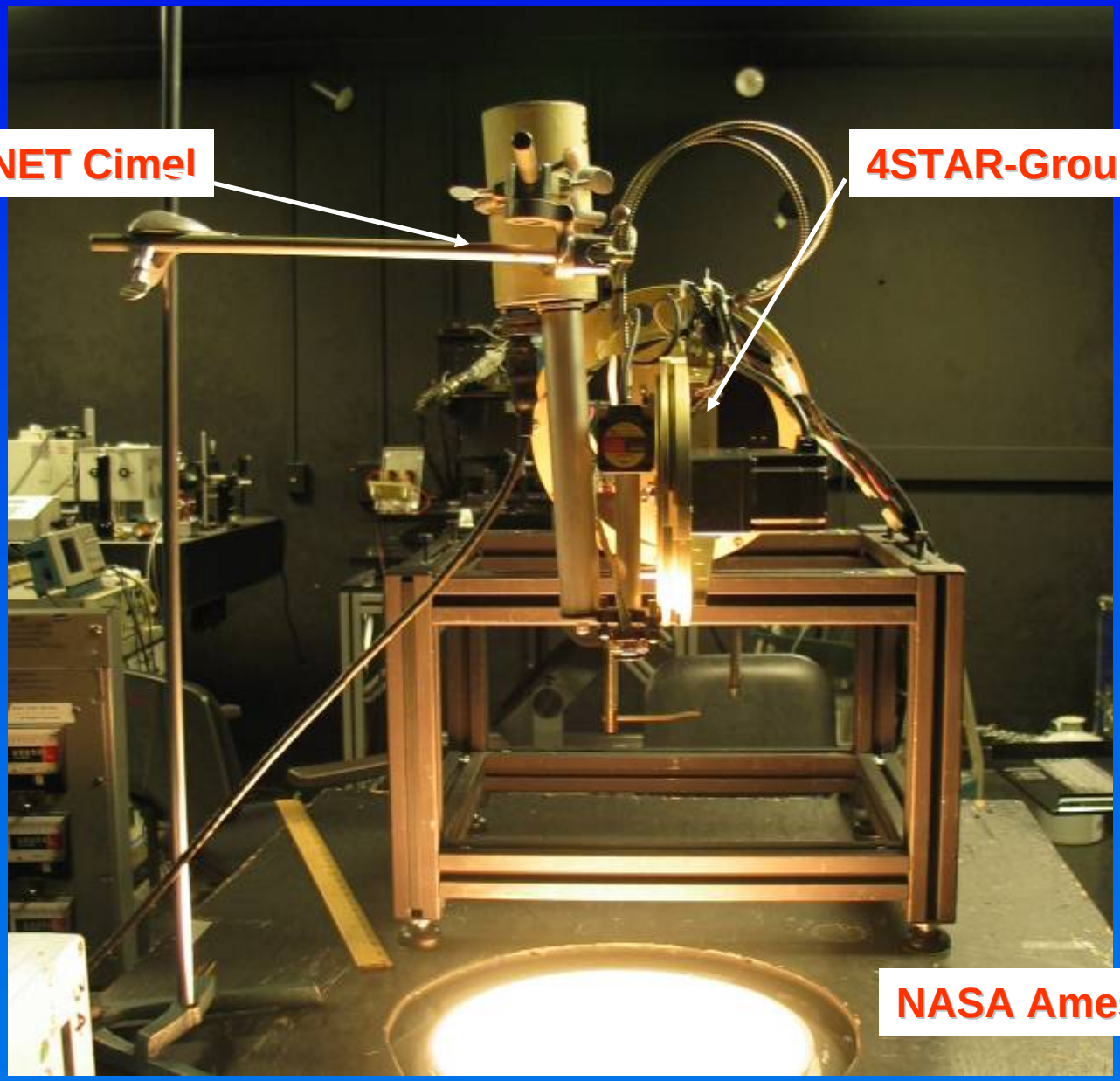

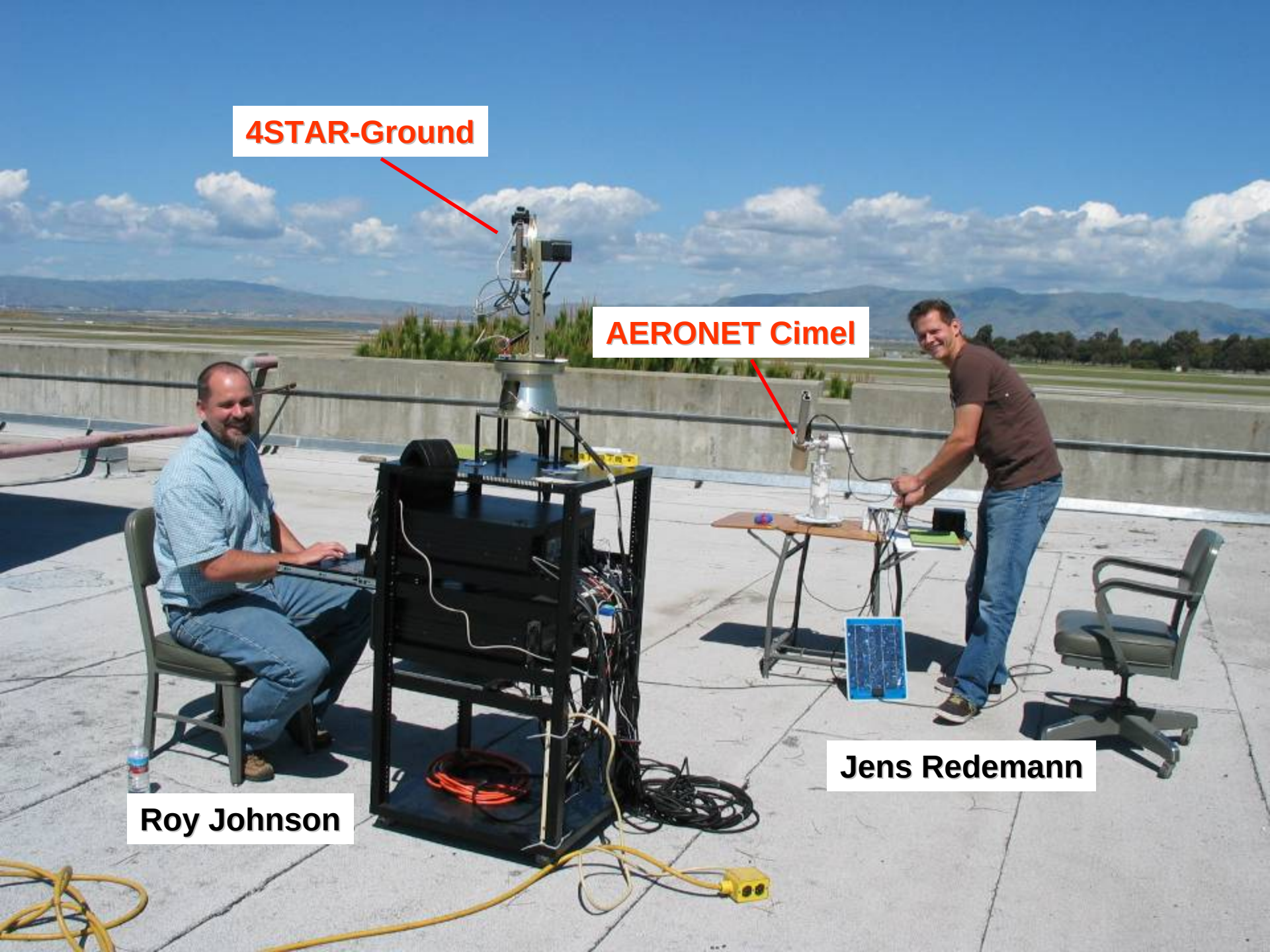
4STAR-Ground
AERONET Cimel
Jens Redemann
Roy Johnson

4STAR and AERONET principal plane scan

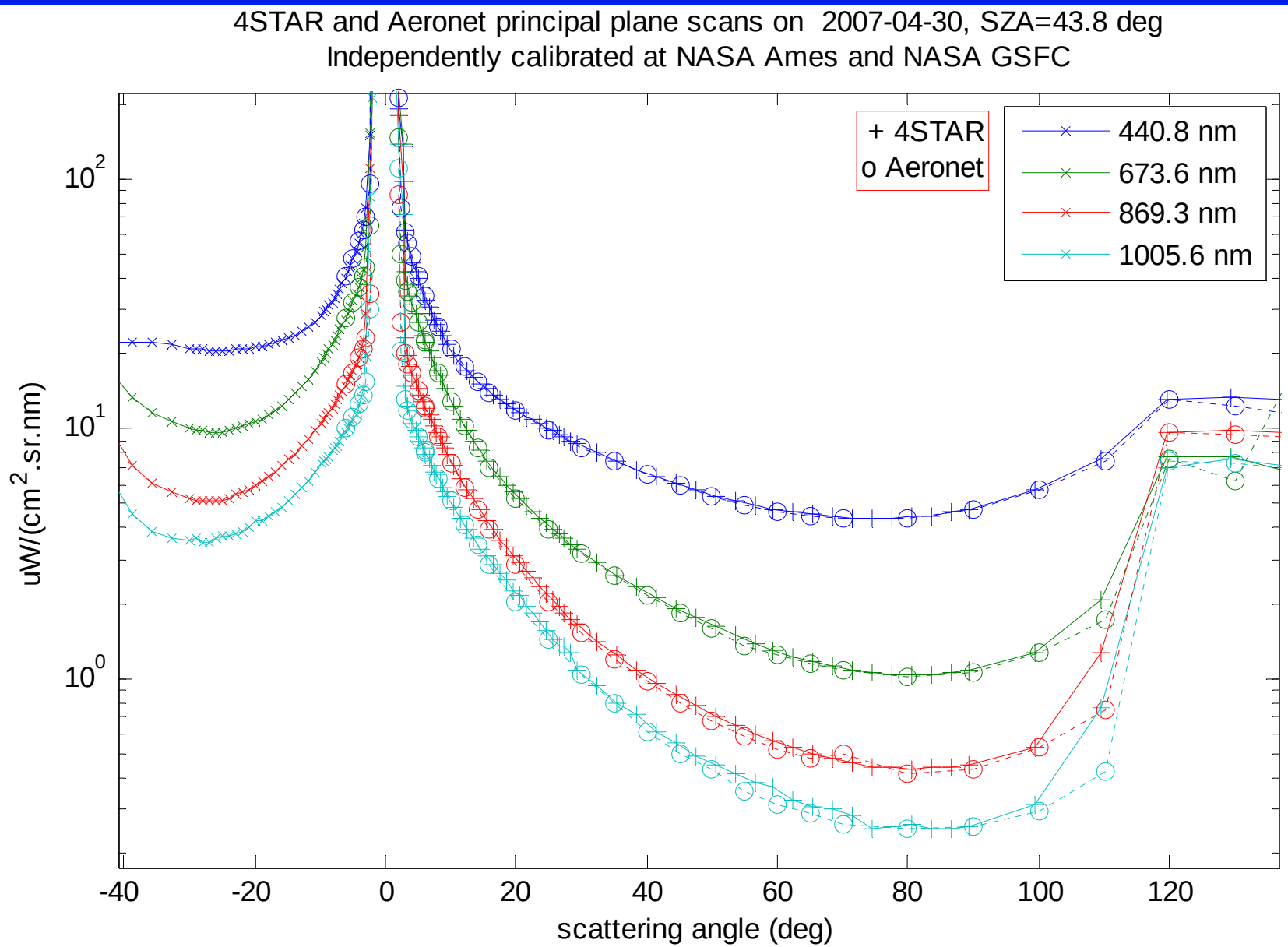

Straylight rejection close to Sun

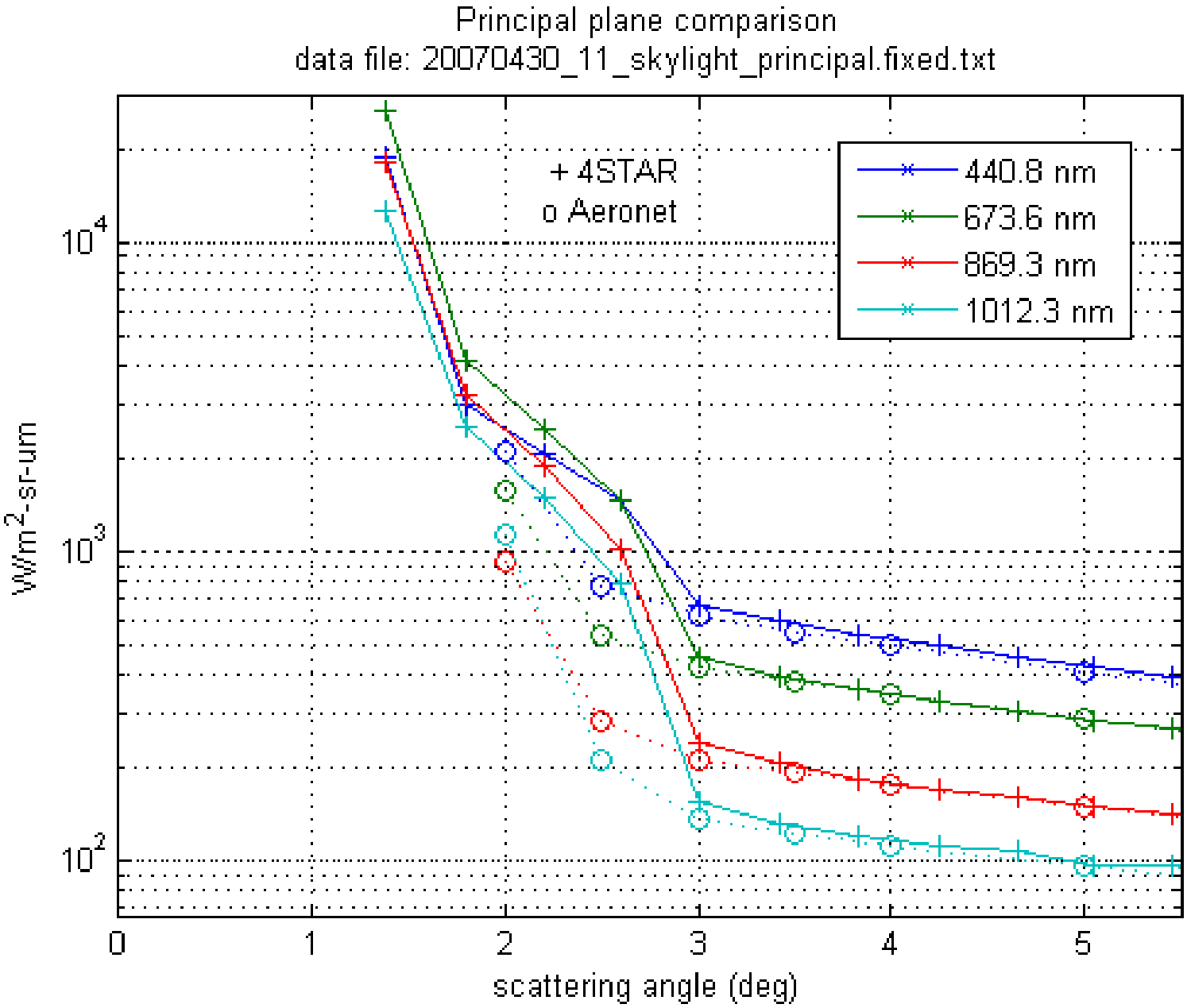

Size Distribution Retrieval
using AERONET Code

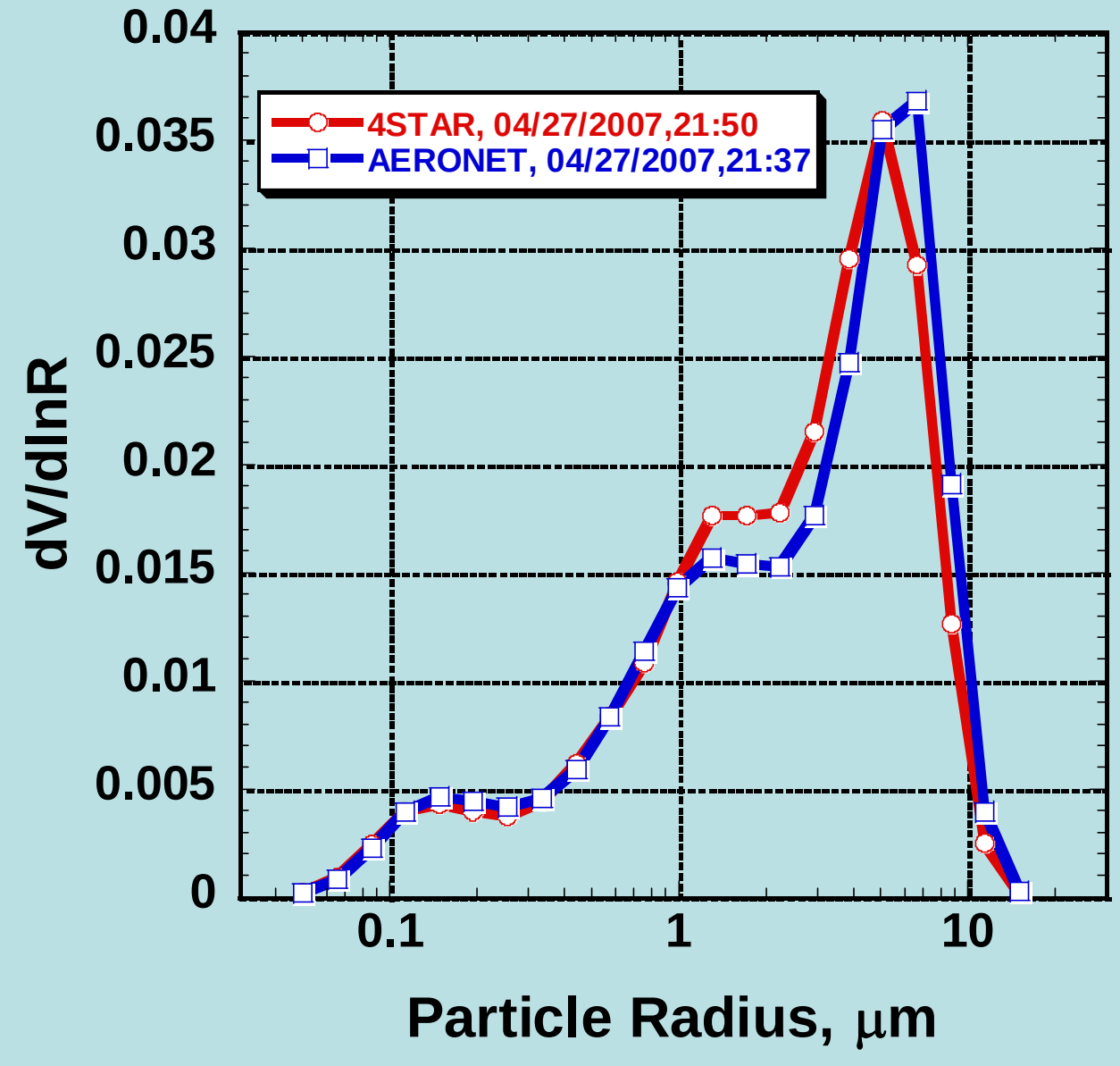

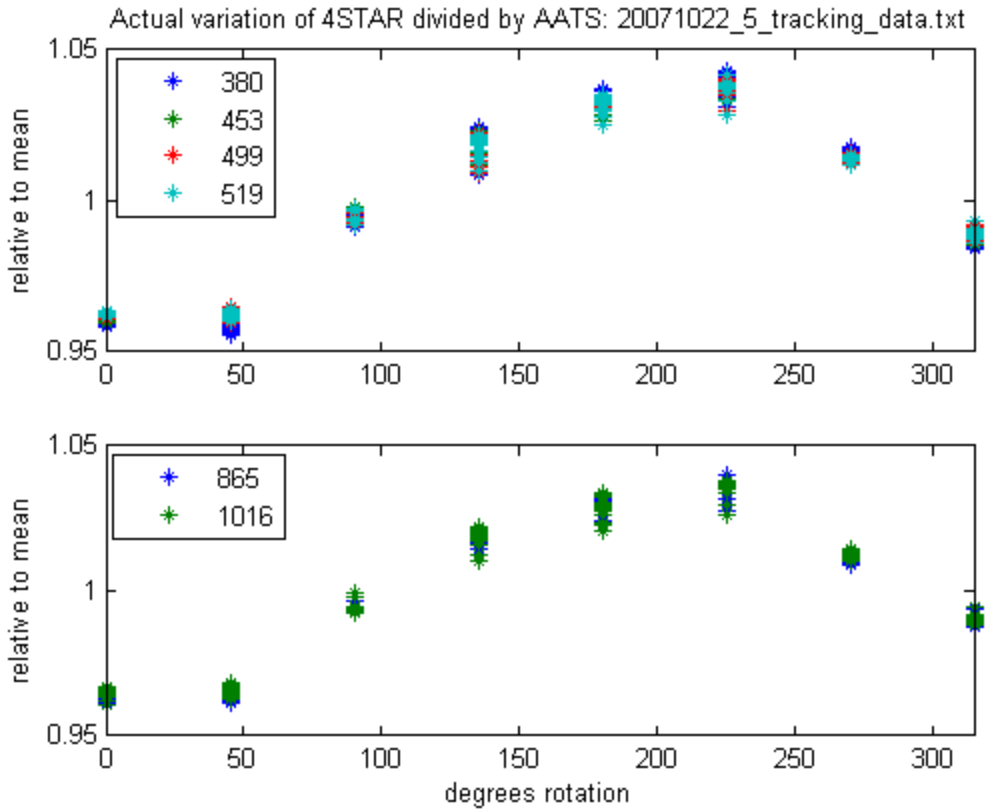
Actual variation of 4STAR divided by AATS: 20071022_5_tracking_data.txt
relative to mean
380
453
499
519
865
1016
degrees rotation

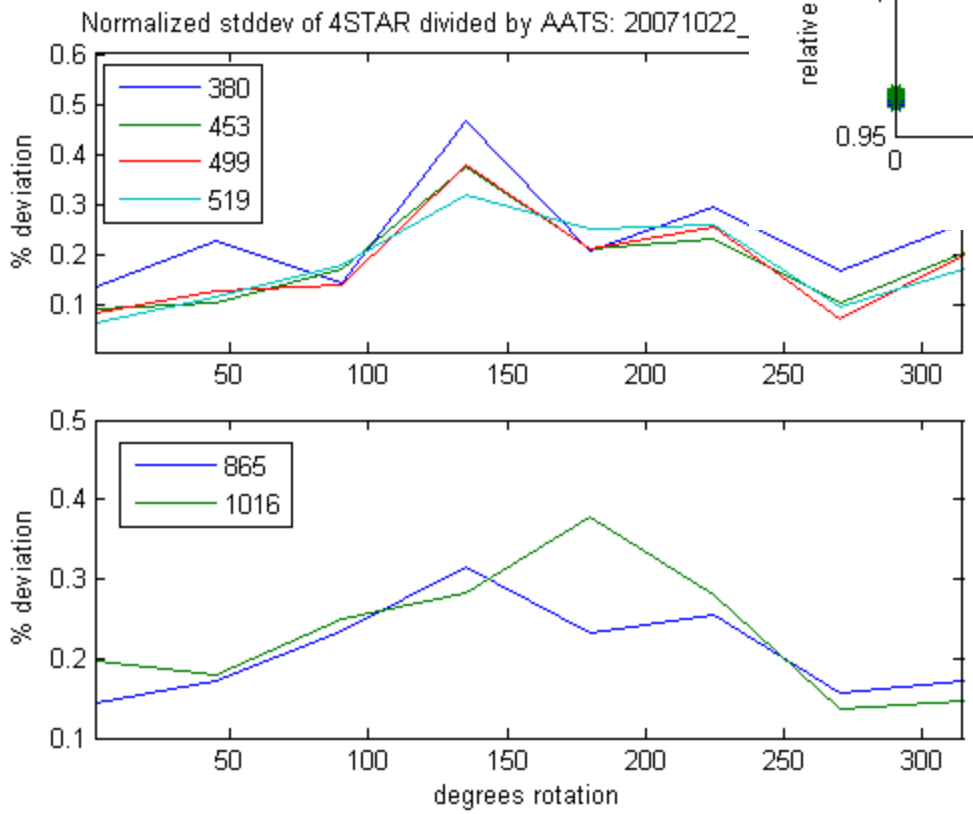
Normalized stddev of 4STAR divided by AATS: 20071022_
% deviation
380
453
499
519
865
1016
degrees rotation

Next steps…

- New collector design, 100X light volume
- Mauna Loa, spectral Langley calibration
- Improve calibration of SW radiance
- Add LW spectrometer for more size and absorption information
- Continue spectral inversion development
- Harden design for airborne deployment

4STAR-G Sky Collector
(Cross-section Mechanical)

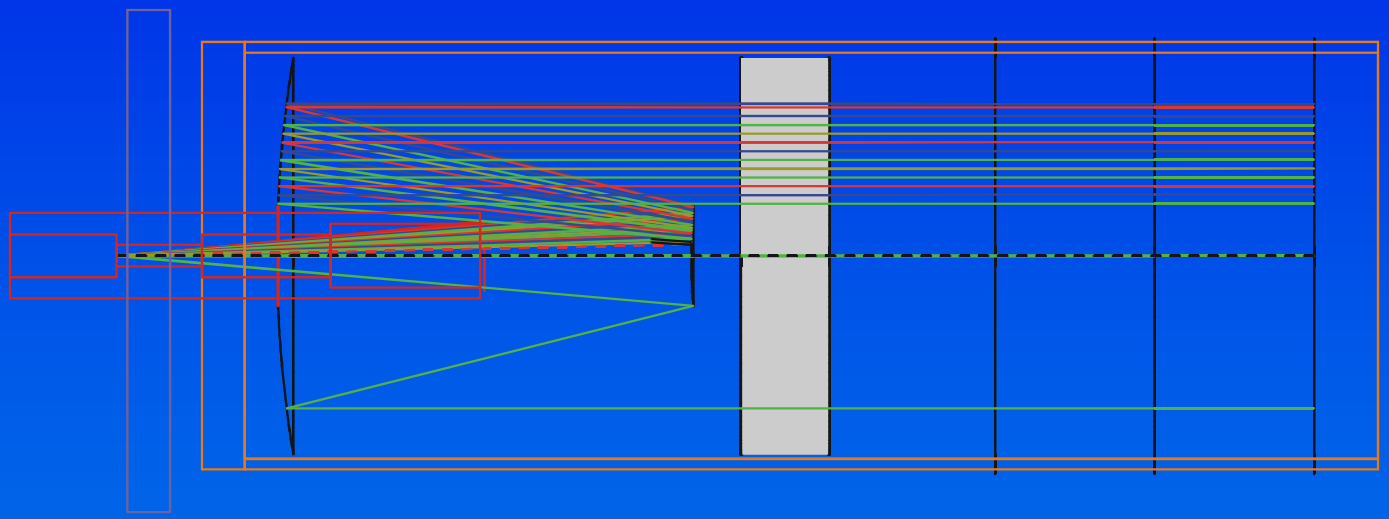

Black/gray – optical surfaces

Orange – 1” ID x 40 tpi Thorlabs optical tube

Red – Fiber coupler / internal baffle tube

Purple – Rotary shutter rod