YOUNG

SECTION VIEW OF TEMPERATURE SHIELD

WITH VAISALA HMP-45 RELATIVE HUMIDITY/TEMPERATURE PROBE

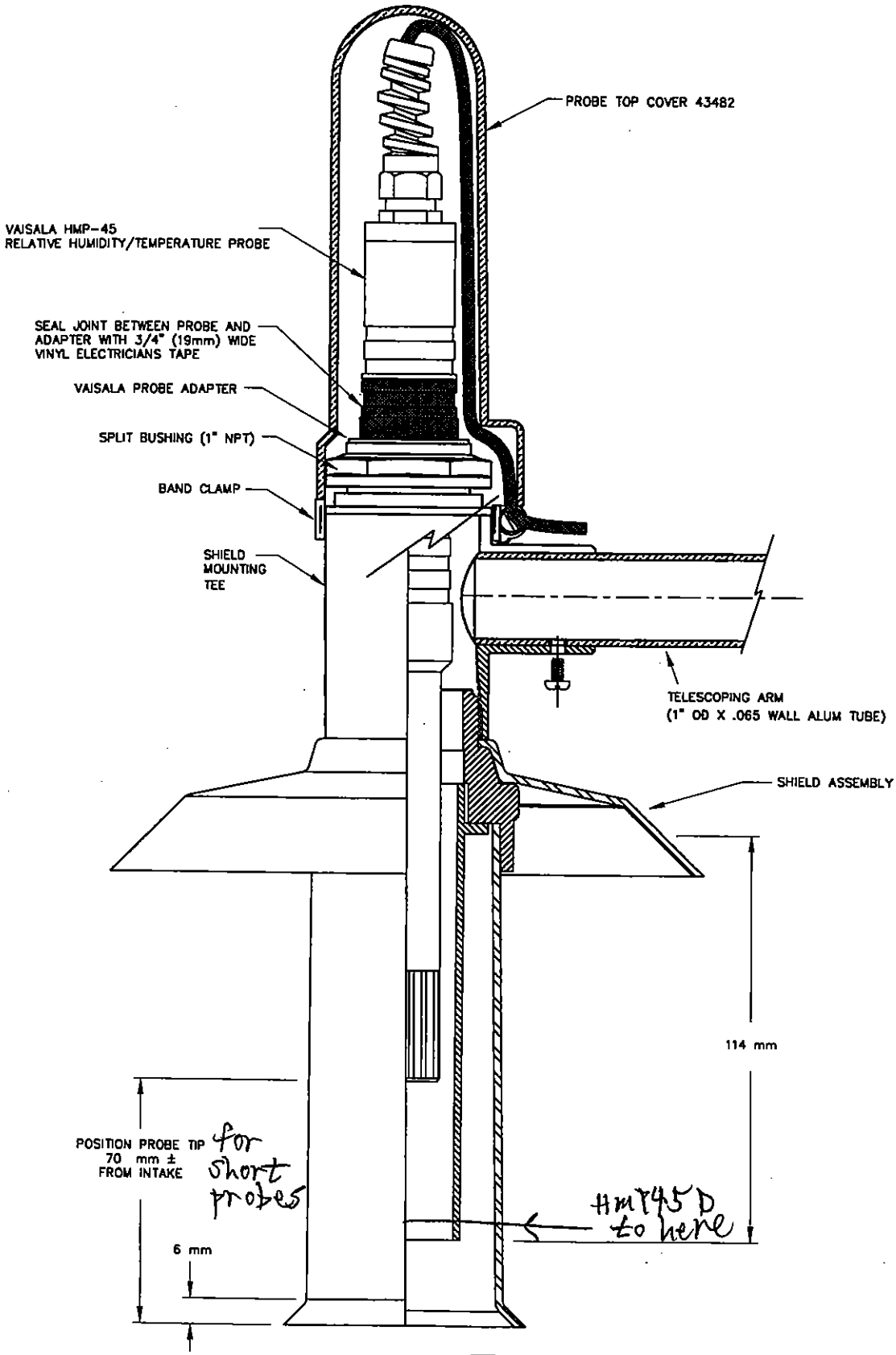

MODEL 43408F-12	DWG A	PRD 06-00
SECTION VIEW WITH VAISALA HMP-45	DWN KL	DWG 06-00
RELATIVE HUMIDITY/TEMPERATURE PROBE	CHK	S43408F-12
R.M. YOUNG CO. TRAVERSE CITY, MI 49686 U.S.A. 231-946-3980		

MODEL 43408F-12 ASPIRATED RADIATION SHIELD

12 VDC/420mA BRUSHLESS DC MOTOR

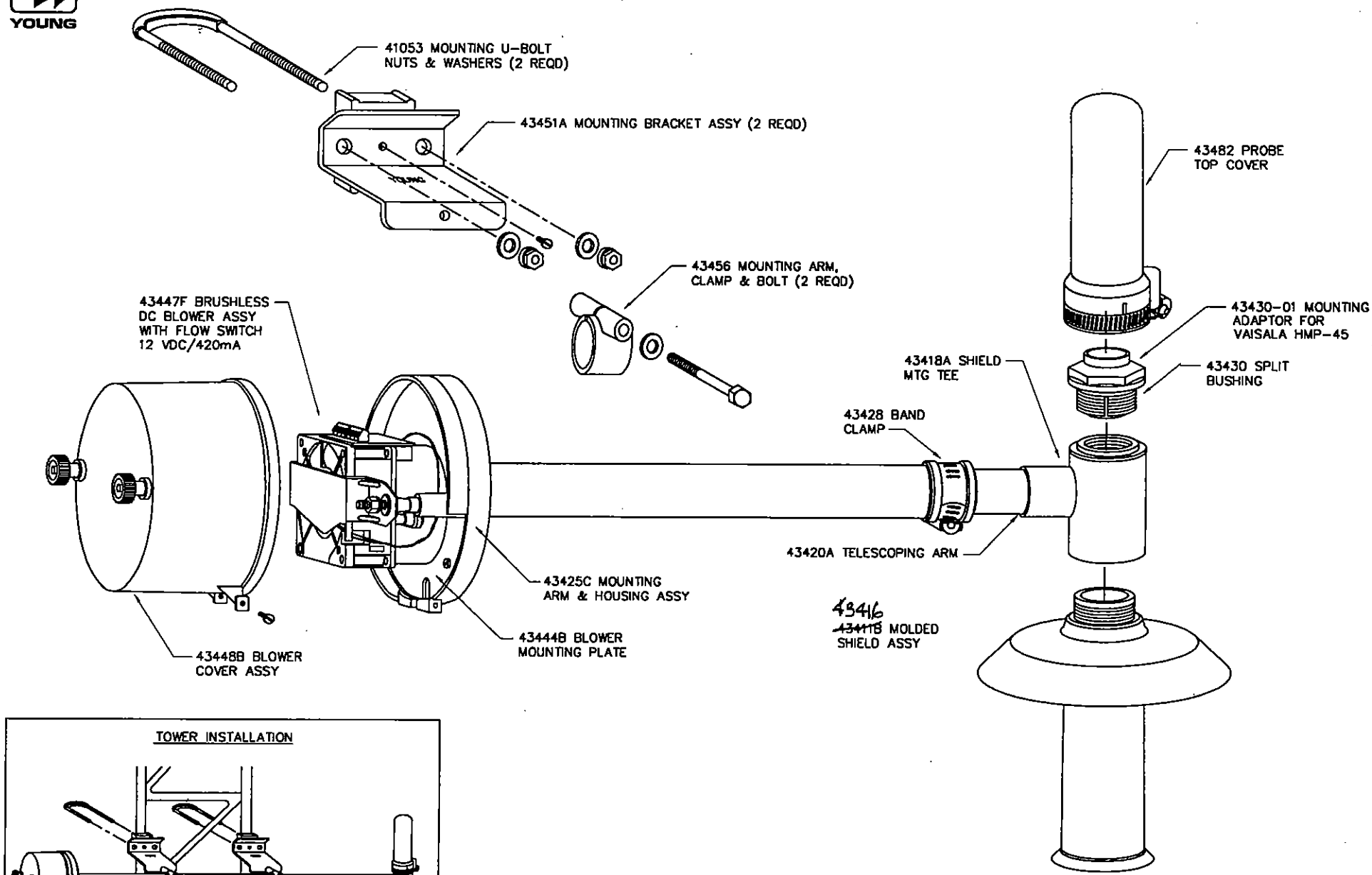

TOWER INSTALLATION

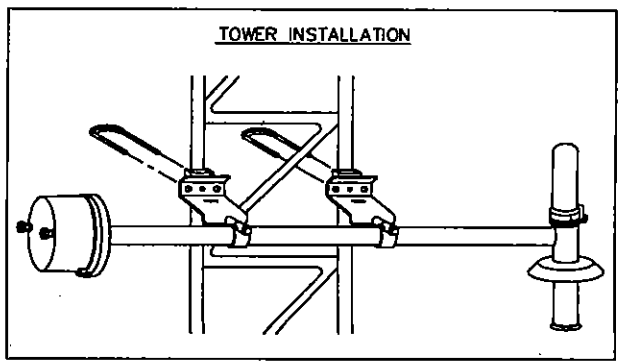

MODEL 43408F-12	DWG A	PRD 06-00
ASPIRATED RADIATION SHIELD	DWN KL	DWG 06-00
GENERAL ASSY & REPLACEMENT PARTS	CHK J.C.	E43408F-12
R.M. YOUNG CO. TRAVERSE CITY, MI 49686 U.S.A. 231-946-3980		