Ultrasonic Wind Sensors
WS425

USER'S GUIDE

M210361en-A
February 2003

VAISALA

PUBLISHED BY

Vaisala Oyj
P.O. Box 26
FIN-00421 Helsinki
Finland

Phone (int.): +358 9 8949 1
Fax: +358 9 8949 2227

Visit our Internet pages at http://www.vaisala.com/

© Vaisala 2003

No part of this manual may be reproduced in any form or by any means, electronic or mechanical (including photocopying), nor may its contents be communicated to a third party without prior written permission of the copyright holder.

The contents are subject to change without prior notice.

Please observe that this manual does not create any legally binding obligations for Vaisala towards the customer or end user. All legally binding commitments and agreements are included exclusively in the applicable supply contract or Conditions of Sale.

Table of Contents

CHAPTER 1
GENERAL INFORMATION 5
About This Manual 5
Contents of This Manual 5
Version Information 6
Feedback 6
Safety 7
General Safety Considerations 7
Product Related Safety Precautions 8
Absolute Maximum Voltages 8
ESD Protection 8
Regulatory Compliances 9
EN55011 Class A Group 1 & EN50082-2 9
MIL-STD-426 Method RS03 9
MIL-STD 810 Method 501 Process 1 9
MIL-STD 202 Method 213 9
Third-Party Testing (Field Tests Included) 10
NWS ASOS Mechanical Wind Sensor Replacement 10
Lawrence Livermore Labs 10
Tennessee Valley Authority 10
CETIAT (Centre Technique des Industries Aéraulique et Thermiques) 10
Trademarks 10
License Agreement 11
Warranty 11

CHAPTER 2
PRODUCT OVERVIEW 13
Introduction to WS425 13
Measuring Principle 13
Sensor Operating Modes 14
Sensor Features 15
Polar Wind Speed and Direction 15
Wind Speed X and Y Components 16
Scalar Averaging of Wind Speed and Direction 16
Vector Averaging of Wind Speed and Direction 17
Wind Direction Coasting 17
Gust Wind Speed and Direction Over Time 18

CHAPTER 3
INSTALLATION 19
Selecting Location 19
Installation Procedure 19

Unpacking Instructions 19
Factory Settings 20
RS-232 Default Settings for USA 20
Default Settings of RS-232, RS-422, and RS-485 for Europe 21
Mounting 24
Mounting Procedure on a 1-inch IPS Vertical Pipe 24
Alignment 24
Magnetic Declination Correction 24
Compass Alignment with a Mast Adapter 26
Connections 27
Powering 30
Power Supplies 30

CHAPTER 4
OPERATION 31
Analog Mode 31
Wind Speed 31
Wind Direction 34
Missing Readings 34
Serial Mode 35
Overview 35
Serial Mode Default Settings for the USA 35
Serial Mode Default Settings for Europe 36
Configuration Menu 36
Configuration Commands 37
Handar RS232 37
Identify Command I 38
Measurement Command Wx 38
Missing Readings 39
Measurement Unit Change Command Ux 39
NMEA Standard 40
Missing Readings 40
NMEA Extended Message 41
WAT11 Message 43
Missing Readings 43
Wind Speed Units 44
Average Interval 44
Averaging Method 44
Scalar Averaging 45
Vector Averaging 45
Output Interval 45
Sensor ID Character 45
Wind Direction Coast Threshold 46
Head Orientation 46
Bit Rate 47
Parity 47
Data Bits 47
Save Configuration 47
Zero Speed Calibration 48
Resume Operation 48
SDI-12 Protocol 48
SDI-12 Support Group 49

SDI-12 Electrical Interface....49
Serial Data Line....49
Voltage Transitions....50
Impedance....50
SDI-12 Communications Protocol....50
Baud Rate and Byte Frame Format....51
Two Different Submodes....51
Standard SDI-12 Commands Supported by WS425....52
Acknowledge Active Command (a!)....52
Send Identification Command (aI!)....53
Address Query Command (?!)....54
Change Address Command (aAb!)....55
Start Measurement Command (aM!)....56
Send Data Command (aD0!)....56
Continuous Measurements (aR0!)....58
Start Verification (aV!)....59
Vaisala-specific SDI-12 Commands Supported by WS425 60
Measurement Unit Change (aXUx!)....60
Heater Control Command (aXHx!)....61
Check Current Submode (aX?!)....62
Place Sensor in Submode B (aXQx;c.c;n;yyyy!)....62
Reset the Sensor to Submode A Command (aXS!)....63
Check Current Measurement Unit (aX*!)....64
SDI-12 TIMING....65

CHAPTER 5
MAINTENANCE....67
Periodic Testing....67

CHAPTER 6
TROUBLESHOOTING....71
Common Problems....71
Frequently Asked Questions (FAQ)....71
Instructions for Opening a Serial Terminal Connection to WS425....73
Technical Support....74
Return Instructions....74

CHAPTER 7
TECHNICAL DATA....77
Specifications....77

APPENDIX A

List of Figures

Figure 1 Different Wind Speed and Direction Presentations....16
Figure 2 Mounting the Sensor to Adapter....22
Figure 3 WS425 Main Dimensions....23
Figure 4 Sketch of Magnetic Declination....25

Figure 5 Suunto Compass MC-2 ... 25
Figure 6 Correctly Aligned WS425 Ultrasonic Wind Sensor ... 26
Figure 7 Adjusting the N-S Heads ... 27
Figure 8 Open-Lead Cables for WS425 Sensors ... 29
Figure 9 Frequency Connection ... 32
Figure 10 Wind Speed ... 33
Figure 11 Analog Connection ... 34
Figure 12 Timing Diagram ... 65
Figure 13 Margin Verifier ... 69
Figure 14 WS425FIX30 Adapter ... 79
Figure 15 WS425FIX60 Adapter ... 80
Figure 16 WS425FIX60 Adapter ... 80

List of Tables

Table 1 Manual Revisions ... 6
Table 2 Sensor Ordering Options vs. Supported Data Outputs ... 6
Table 3 Ordering Codes ... 7
Table 4 Maximum Voltages ... 8
Table 5 Sensor Features ... 15
Table 6 Wind Direction Coasting ... 18
Table 7 Gust Wind Speed and Direction Over Averaging Time ... 18
Table 8 WS425 Sensor Pins ... 28
Table 9 The Handar RS232 Polling Commands ... 37
Table 10 The RS-232 19-character Fixed Length Output Message ... 38
Table 11 Checksum Table ... 42
Table 12 Consecutive Measurements of Wind Direction ... 46
Table 13 Logic and Voltage Level for Serial Data ... 50
Table 14 Byte Frame Format for SDI-12 ... 51
Table 15 SDI Timing Chart ... 52
Table 16 Technical Specifications ... 77

CHAPTER 1

GENERAL INFORMATION

This chapter provides general notes for the product.

About This Manual

This manual provides information for installing, operating, and maintaining the WS425 Ultrasonic Wind Sensors.

Contents of This Manual

This manual consists of the following chapters:

- Chapter 1, General Information, provides general notes for the product.
- Chapter 2, Product Overview, describes the features of the WS425 Ultrasonic Wind Sensors.
- Chapter 3, Installation, provides you with information that is intended to help you install this product.
- Chapter 4, Operation, explains the operation and programming of WS425.
- Chapter 5, Maintenance, provides you with general maintenance information.
- Chapter 6, Troubleshooting, provides you information on common problems
- Chapter 7, Technical Data, gives the technical data on the product.
- Appendix A includes detailed pictures of the adapters.

Version Information

Table 1 Manual Revisions

Manual Code	Description
U428en-1.1	Applicable to Models WAS425A and WAS425AH Firmware versions 1.04.
M210361en-A	This manual.

Feedback

Vaisala Documentation Team welcomes your comments and suggestions on the quality and usefulness of this publication. If you find errors or have other suggestions for improvement, please indicate the chapter, section, and page number. You can send comments to us by e-mail: manuals@vaisala.com

Table 2 Sensor Ordering Options vs. Supported Data Outputs

Sensor Ordering Options	Sensor Cable	Supported Operating Modes	Supported Data Outputs
WS425 x 1 ... (Analog/ SDI-12/RS-232USA)	SDI-12 cable	SDI-12 submode A SDI-12 submode B	SDI-12 standard commands
	Analog cable	Analog mode	WS [Hz] 0 ... 65
			WS [V] 0 ... 1
			WD [V] 0 ... Vref
	RS-232 cable	Serial mode with wind speed unit = miles per hour	RS-232 NMEA message Vaisala WATT 11 message Vaisala Handar message
WS425 x 2 ... (RS-232/ RS-485/RS-422	RS-232 cable	Serial mode with wind speed unit = meters per second	RS-232 NMEA message Vaisala WATT 11 message Vaisala Handar message
	RS-422/ RS-485 cable		RS-422 NMEA message Vaisala WATT 11 message Vaisala Handar message
			RS-485 NMEA message Vaisala WATT 11 message Vaisala Handar message

Table 3 Ordering Codes

Old code	New code					
425A	WS425	A	1	A	1	B
425AH	WS425	B	1	A	1	B
425S	WS425	A	1	A	1	B
425SH	WS425	B	1	A	1	B
WAS425A and WAS425A-C	WS425	A	2	A	2	B
WAS425AH and WAS425AH-C	WS425	B	2	A	2	B
WAS425S and WAS425S-C	WS425	A	2	A	2	B
WAS425SH and WAS425SH-C	WS425	B	2	A	2	B
425T	WS425	B	3	A	4	A
425T-1	WS425	B	4	A	4	A
425L	WS425	A	5	A	1	A
425SAMS	WS425	C	1	A	1	A
425AHW-1	WS425	E	6	A	1	A
425NWS	WS425	D	7	A	1	A

Safety

General Safety Considerations

Throughout the manual, important safety considerations are highlighted as follows:

WARNING Warning alerts you to a serious hazard. If you do not read and follow instructions very carefully at this point, there is a risk of injury or even death.

CAUTION Caution warns you of a potential hazard. If you do not read and follow instructions carefully at this point, the product could be damaged or important data could be lost.

NOTE Note highlights important information on using the product.

Product Related Safety Precautions

Absolute Maximum Voltages

The absolute maximum voltages that may be applied to WS425 sensor are listed in Table 4 below. The following limits do not damage the sensor but they are not operational limits.

Table 4 Maximum Voltages

Pin	Min. volts	Max. volts	Ordering Options	
			WS425 x 2 ...	WS425 x 1 ...
1			Ground	Ground
2			Ground	Ground
3			Ground	Ground
4			N/C	N/C
5	-0.3	5.3	Jumper	Jumper
6	-0.3	5.3	Jumper	Jumper
7			Ground	Ground
8			Ground	Ground
9	-12.0	20.0	Digital Output	Digital Output
10	-12.0	20.0	Digital Input	Digital Input
11	-0.5	18.0	+12 V Power	+12 V Power
12	-0.5	5.3	Digital Output	Analog Input
13	-10.0	12.0	N/C	Analog Output
14	-10.0	12.0	Digital Input	Analog Output
15	-0.5	5.3	N/C	Analog Output
16	-5.0	42.0	Heater Power	Heater Power

ESD Protection

Electrostatic Discharge (ESD) can cause immediate or latent damage to electronic circuits. Vaisala products are adequately protected against ESD for their intended use. However, it is possible to damage the product by delivering electrostatic discharges when touching, removing, or inserting any objects inside the equipment housing.

To make sure you are not delivering high static voltages yourself:

- Handle ESD sensitive components on a properly grounded and protected ESD workbench. When this is not possible, ground yourself to the equipment chassis before touching the boards. Ground yourself with a wrist strap and a resistive connection cord. When neither of the above is possible, touch a conductive part of the equipment chassis with your other hand before touching the boards.

- Always hold the boards by the edges and avoid touching the component contacts.

Regulatory Compliances

The Vaisala WS425 Ultrasonic Wind Sensor has been tested to fulfill the following regulatory compliances. Also mentioned here are some third-party tests that involved field testing of the sensor.

EN55011 Class A Group 1 & EN50082-2

- Radiated emissions
- Conducted emission
- Electrostatic discharge
- Radiated susceptibility
- Conducted susceptibility
- Electrical task transient burst surge
- Magnetic susceptibility
- Voltage dips & interrupts

MIL-STD-426 Method RS03

- Electromagnetic compatibility

MIL-STD 810 Method 501 Process 1

- Salt spray test

MIL-STD 202 Method 213

- Mechanical shock

Third-Party Testing (Field Tests Included)

NWS ASOS Mechanical Wind Sensor Replacement

Vaisala has participated in a three-year test program conducted by the U.S. National Weather Service ASOS Program group. The NWS has conducted a variety of tests including wind tunnel tests from 0 to 120 knots and field tests in various locations.

Lawrence Livermore Labs

Lawrence Livermore Labs tested the sensor independently and Grank Gouveia and Ron Baskett have published a paper titled Evaluation of a New Sonic Anemometer for Routing Monitoring and Emergency Response Applications. A second paper titled Comparison of In-Situ Data from the Handar Sonic Anemometer and the Met One Cup and Vane [AMS proceedings of the 10th symposium on Meteorological Observations and Instrumentation] published by Frank Gouveia and Thomas Lockhart.

Tennessee Valley Authority

The TVA conducted comparative field tests of mechanical cup and vane sensors versus the Vaisala WS425 Ultrasonic Wind Sensor. The results were published in the AMS conference in 2001 by authors Kenneth G. Wastrack and Doyle E. Pittman et al.

CETIAT (Centre Technique des Industries Aéraulique et Thermiques)

CETIAT has evaluated the accuracy of the WS425 Ultrasonic Wind Sensor in a wind tunnel against a laser Doppler anemometer (LDA) reference sensor.

Trademarks

Microsoft®, Windows®, and Windows NT® are registered trademarks of Microsoft Corporation in U.S. and/or other countries.

License Agreement

All rights to any software are held by Vaisala or third parties. The customer is allowed to use the software only to the extent that is provided by the applicable supply contract or Software License Agreement.

Warranty

For certain products Vaisala normally gives a limited one-year warranty. Please observe that any such warranty may not be valid in case of damage due to normal wear and tear, exceptional operating conditions, negligent handling or installation, or unauthorized modifications. Please see the applicable supply contract or conditions of sale for details of the warranty for each product.

This page intentionally left blank.

CHAPTER 2

PRODUCT OVERVIEW

This chapter describes the features of the WS425 Ultrasonic Wind Sensors.

Introduction to WS425

Measuring Principle

The WS425 Ultrasonic Wind Sensor has an on-board microcontroller that captures and processes data and performs serial communications.

The wind sensor has an array of three equally spaced ultrasonic transducers on a horizontal plane. The sensor measures transit time, the time that it takes the ultrasound to travel from one transducer to another. The transit time is measured in both directions.

The transit time depends on the wind velocity along the ultrasonic path. For zero wind velocity, both the forward and reverse transit times are the same. With wind along the sound path, the up-wind transit time increases and the down-wind transit time decreases.

The microprocessor of the microcontroller calculates the wind speed from the transit times using the following formula:

$$V_W = 0.5 \cdot L \cdot (1/t_f - 1/t_r)$$

where:

V_w	=	Wind velocity
L	=	The distance between two transducers
t_f	=	The transit time in the forward direction
t_r	=	The transit time in the reverse direction.

Measuring the six transmit times allows wind velocity to be calculated for each of the three ultrasonic paths, which are offset to each other by 120°. The calculated wind speeds are independent of altitude, temperature, and humidity because they cancel out with the six measurements even though the velocity of sound affects individual transit times.

Incorrect readings may occur when a large raindrop or ice pellet hits a transducer. They are eliminated by a proprietary signal processing technique. The wind velocity that is most affected by turbulence error is eliminated so that wind speed and wind direction are calculated from the best two vectors.

Sensor Operating Modes

There are four modes of operation that give different information:

- Analog
- SDI-12 mode A
- SDI-12 mode B
- Serial mode RS-232/422/485

Only one of these modes can be operated at a time. The sensor must be ordered according to the desired mode of operation.

Sensor Features

Some of the sensor features depend on the WS425 operating mode. Table 5 below outlines where the features are available.

Table 5 Sensor Features

Sensor Feature	Operating Mode			
	Serial	**Analog**	**SDI-12 submode A**	**SDI-12 submode B**
Polar wind speed and direction	Yes	Yes	Yes	Yes
Wind speed x and y components	No	No	Yes	Yes
Scalar averaging of wind speed and direction	1 s ... 9 s	No	No	3 s ... 1 h
Vector averaging of wind speed and direction	1 s ... 9 s	No	No	3 s ... 1 h
Wind direction coasting	Yes	No	No	Yes
Wind direction reversible for upside down mounting	Yes	No	No	No
Enable/disable heater command	No	No	Yes	Yes
Selectable wind speed unit	Yes	No	Yes	Yes
Gust wind speed and direction over averaging time	Calculate from instant data	Calculate from instant data	Yes	Yes
Low-current standby (sensor sleep)	No	No	0.2 mA@ 12 VDC	7.7 mA@ 12 VDC
Current with 1 Hz measurement	18 mA@ 12 VDC	12 mA@ 12 VDC	7.7 mA@ 12 VDC	12 mA@ 12 VDC
Data acquisition by polling	Yes	No	Yes	Yes
Continuous data transmission	1 ... 9 s interval	Yes	No	No

Polar Wind Speed and Direction

The wind speed (WS) is represented as a scalar speed in selected units (m/s, kt, mph, km/h). The wind direction (WD) is expressed in degrees (°).

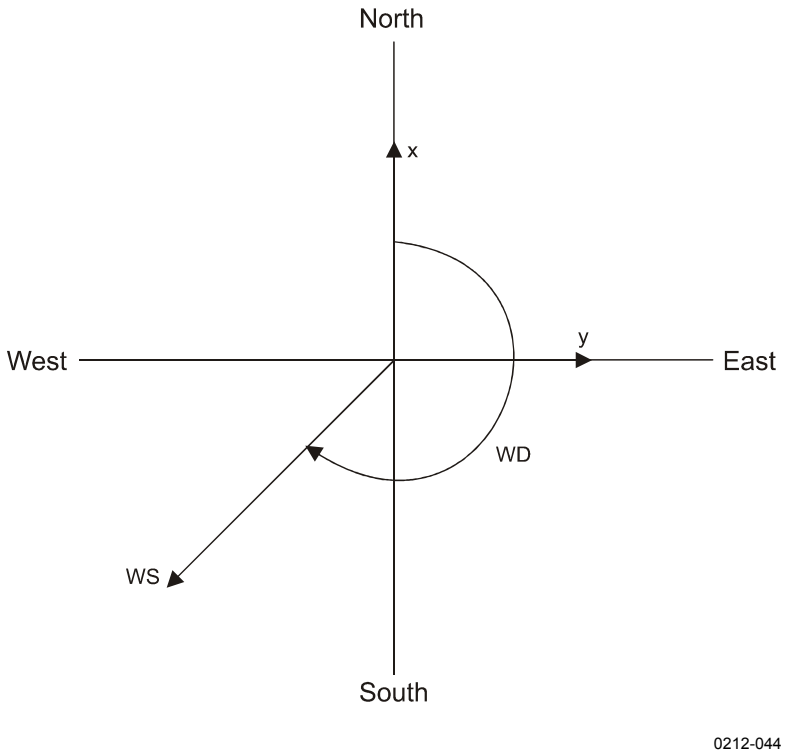

Figure 1 Different Wind Speed and Direction Presentations

Wind Speed X and Y Components

The wind speed (x, y) is represented as two scalar speeds, one parallel to the N-S direction (x) and the other (y) parallel to the W-E direction The speed unit may be m/s, kt, mph, or km/h.

$x = WS \times \cos (WD)$

$y = WS \times \sin (WD)$

Scalar Averaging of Wind Speed and Direction

The scalar average of wind speed and wind direction is available in both SDI-12 submode B and serial modes. The time between each consecutive wind speed and wind direction measurement is one second. Each wind speed measurement taken over the preceding averaging interval is summed and the sum is then divided by the number of measurements.

The sensor computes the true running average. If the Data Acquisition System requests data before the initial averaging interval completes, the sensor returns the best possible running average.

In SDI-12 submode B, the average is determined over the averaging interval specified, which ranges from three seconds to one hour.

In RS-232 mode, the average is determined over the averaging interval specified, which ranges from one to nine seconds.

Wind direction is a circular function with a discontinuity at north, where 360 degrees is equal to zero degrees. For example:

359° + 5° = + 4°
0° - 5° = 355°

The microprocessor translates the circular function to a linear function so that 359° + 5° is translated to 364°. Also, 0° - 5° translated to 355°. This way the wind direction average stays representative of the true situation even if individual samples occur in both sides of the zero direction.

Vector Averaging of Wind Speed and Direction

The vector average is available in SDI-12 submode B and serial mode. Each x velocity and y velocity measurement over the averaging interval is added and then divided by the number of measurements. The resultant average x velocity and average y velocity are converted to polar direction and magnitude, returning as the average direction in degrees and speed in the chosen units. The average is determined over the specified averaging interval (0 ... 9 s for serial mode, 3 s ... 1 h for SDI-12 submode B). The sensor computes a true running average. If the DAS requests data before the initial averaging interval completes, the sensor returns the best possible running average. The averaging calculation uses the direction coast speed.

Wind Direction Coasting

At very low wind speeds, the measured wind direction is meaningless. Therefore, you can specify a direction coast speed. When the measured wind speed drops below the direction coast speed, the calculations use the last wind direction that occurred while the wind

speed was at or above the direction coast speed to the average wind direction. You can specify a direction coast speed between 0.0 and 9.9 units of measurement. Use 0.0 if coasting is not required.

For example, making the direction coast speed = 2.0. The consecutive measurements are presented in Table 6 below.

Table 6 Wind Direction Coasting

Measured Wind Speed	Measured Wind Direction	Wind Direction Used for Averaging
3.5	350	350
2.5	340	340
2.2	340	340
1.9	175	340 (coasting)
1.2	045	340 (coasting)
2.1	345	345

Gust Wind Speed and Direction Over Time

The gust wind speed and direction are available in SDI-12 submode B. It is the highest wind speed and direction recorded during the averaging interval. The gust averaging count can be specified, which is the number of measurements (one measurement each second) average to produce the gust values for speed and direction. It has a range of one to nine counts. As a gust averaging count is specified as one, the reported wind gust is the highest instantaneous reading. An example of a gust averaging count of five will follow. In this example of 14 measurements shown in Table 7 below, measurement 13 has the highest instantaneous wind gust reading.

Table 7 Gust Wind Speed and Direction Over Averaging Time

Measurement	1	2	3	4	5	6	7	8	9	10	11	12	13	14
Wind speed	8	7	6	3	5	3	4	9	8	7	6	10	12	11
Highest sum of 5	-	-	-	-	29	29	29	29	29	31	34	40	43	46
Gust averaging sum of last 5					[29]	[24]	[21]	[24]	[29]	[31]	[34]	[40]	[43]	[46]
Gust wind speed (sum of highest 5) divided by 5	-	-	-	-	5.8	5.8	5.8	5.8	5.8	6.2	6.8	8.0	8.6	9.2
Sum of all wind speed	8	15	21	24	29	32	36	45	53	60	66	76	88	99
Average wind speed	8	7.5	7.0	6.0	5.8	5.3	5.1	5.6	5.9	6.0	6.0	6.3	6.8	7.1

CHAPTER 3

INSTALLATION

This chapter provides you with information that is intended to help you install this product.

Selecting Location

WS425 Ultrasonic Wind Sensor should be installed in a location that is free from turbulence caused by nearby objects, such as trees or buildings. Ideally, the sensor should be higher than any other object within the horizontal radius of 300 m.

WARNING	To protect personnel (and the wind sensor), a lightning rod must be installed with the tip at least one meter above the wind sensor. The rod must be properly grounded, compliant with all local applicable safety regulations.

Installation Procedure

Unpacking Instructions

The ultrasonic wind sensor comes in a custom shipping container. The sensor must be removed from the container carefully. It is important to save the container and all the foam packing for future transporting or shipping.

The sensor comes with a Hex-socket bolt and a grooved bolt to be used in mounting.

CAUTION	Never move the WS425 Ultrasonic Wind Sensor until it is in its custom shipping container. Otherwise, the warranty will become void.

CAUTION	A transducer is located at the top of each of the three arms. Be careful not to damage any of the transducers. Dropping the sensor can break or damage the transducer or the arms will bend and they cannot be re-aligned. Damage can also be caused if the transducers are twisted (the transducers are not screwed into the arms).

Factory Settings

There are two different factory settings available for WS425 if a serial RS-232 protocol is used. For RS-485 and RS-422 protocols, only a single factory configuration is available.

RS-232 Default Settings for USA

Vaisala WS425 Ultrasonic Anemometer, Firmware Version v6.04.

Operation Mode:	Handar RS232
Wind Speed Units:	Miles/Hour
Average Interval (seconds):	1
Averaging Method:	Scalar
Output Interval (seconds, 0 for polled):	0
Sensor ID Character:	A
Wind Direction Coast Threshold (speed units):	0.0
Head Orientation:	Up
Baud Rate:	2400b
Parity:	None
Data Bits:	8
Save Configuration	
Do Zero Speed Calibration	
Resume Operation	

NOTE	These default settings are delivered with product ordering options x1xxx (for example, WS425 A1A2A, where the number 1 refers to the default settings).

Default Settings of RS-232, RS-422, and RS-485 for Europe

Operation Mode:	NMEA Extended
Wind Speed Units:	Meters/Second
Average Interval (seconds):	3
Averaging Method:	Scalar
Output Interval (seconds, 0 for polled):	1
Sensor ID Character:	A
Wind Direction Coast Threshold (speed units):	0.0
Head Orientation:	Up
Baud Rate:	9600b
Parity:	None
Data Bits:	8

NOTE These default settings are delivered with product ordering optons x2xxx (for example, WS425 A2A1A, where the number 2 refers to the default settings.)

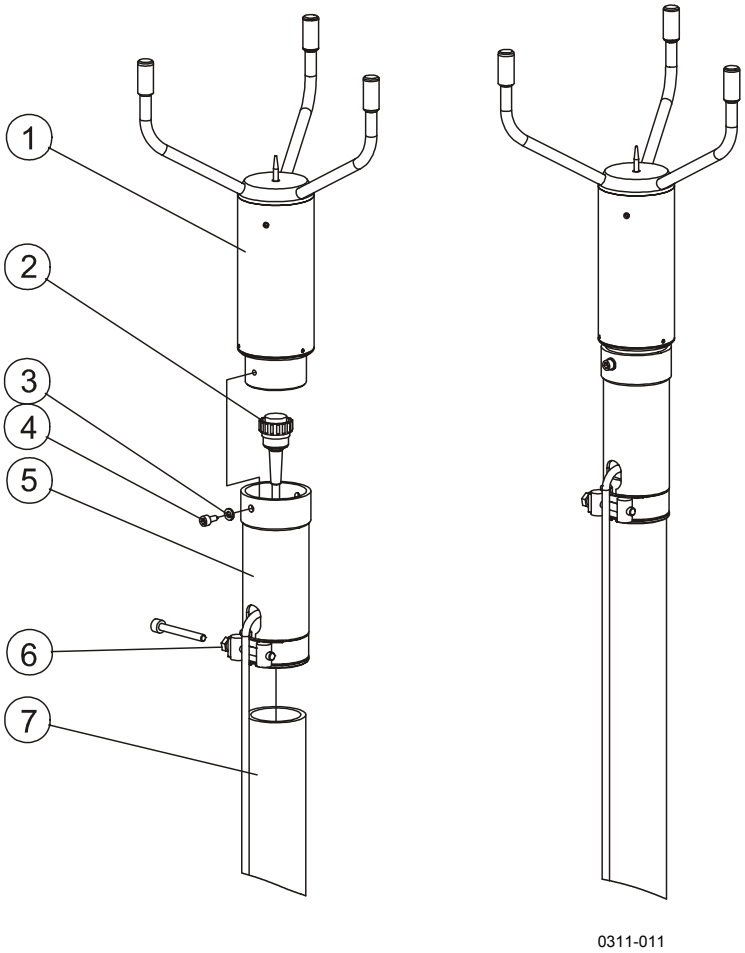

Figure 2 Mounting the Sensor to Adapter

The following numbers refer to Figure 2 above.

1 = Sensor body
2 = Cable connector
3 = Spacer ring
4 = 3/16 inch Hex-socket bolt or standard screw
5 = Sensor adapter
6= Fastening clamp
7= Vertical tube

The dimensions of the adapter are illustrated in Figure 3 on page 23.

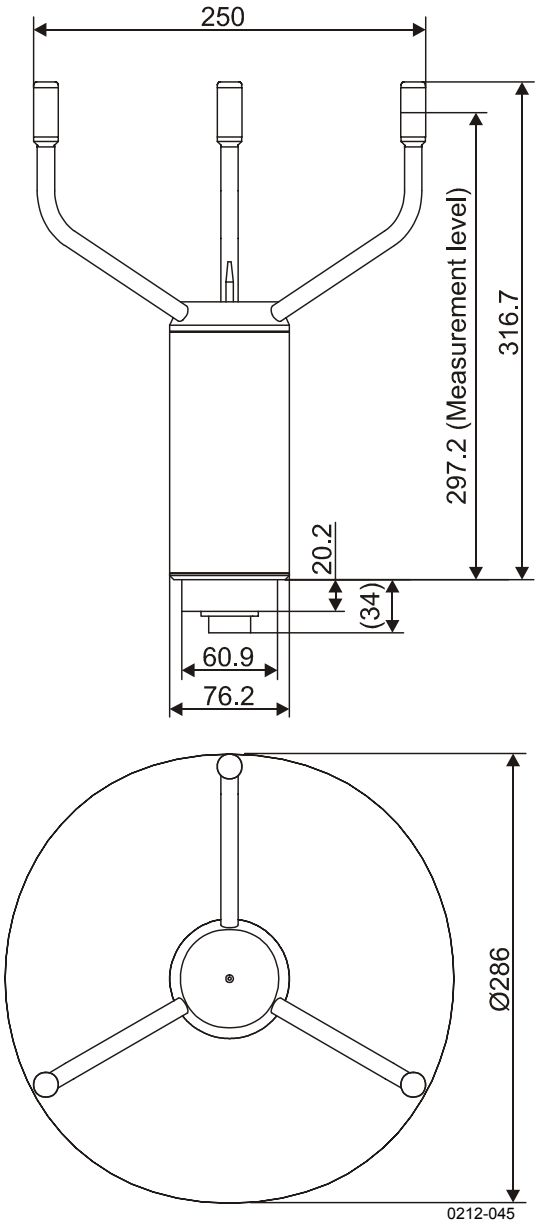

Figure 3 WS425 Main Dimensions

The dimensions are in millimeters.

Mounting

Mounting Procedure on a 1-inch IPS Vertical Pipe

Use the following procedure to mount the sensor to a vertical 1-inch International Pipe Standards (IPS) pipe. WS425FIX30 is suitable for the 1-inch IPS vertical pipe and WS425FIX60 is suitable for a 60-mm vertical pipe (Europe). See Figure 2 on page 22 for details.

To mount the sensor, do the following:

1. Remove the hex-socket bolt or standard screw shown in Figure 2 on page 22 (use 3/16-inch Allen key or a crosshead screwdriver).
2. Connect the cable to the sensor, routing it through the adapter.
3. Attach the adapter to the sensor body and tighten the bolt.
4. Run the cable out of the adapter slot between the sensor and the clamp. Optionally, you can run the cable inside the vertical pipe.
5. Place the sensor on the pipe and slightly tighten the clamp's bolt.
6. Align wind direction as explained in section Alignment on page 24.

Alignment

Magnetic Declination Correction

One transducer arm is permanently marked with an N for north and another with an S for south.

NOTE	Aligning might be easier if you mark the sensor body, for example, with paint or colored tape, to indicate north and south so that it can be seen from the ground.

Wind direction can be referenced to either the true north, which uses the earth's geographic meridians, or to the magnetic north, which is read with a magnetic compass. The magnetic declination is the difference in degrees between the true north and magnetic north. See Figure 4 on page 25.

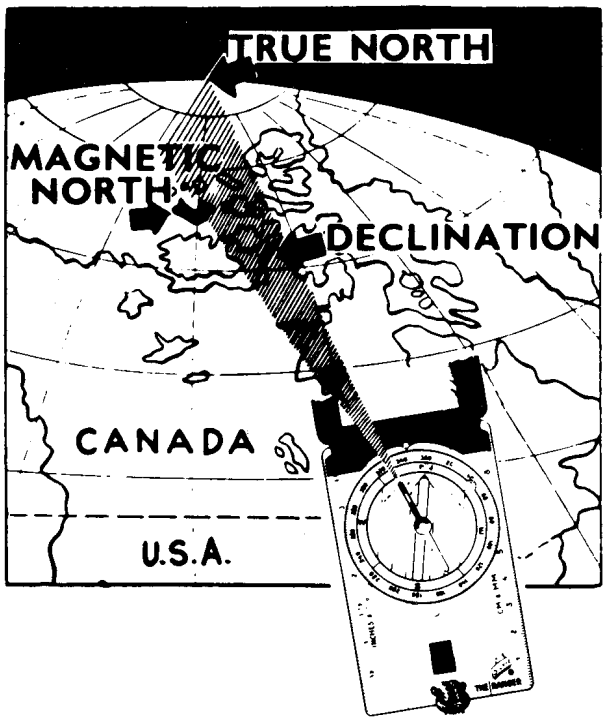

0003-011

Figure 4 Sketch of Magnetic Declination

NOTE	The source for the magnetic declination must be current as the declination changes over time.

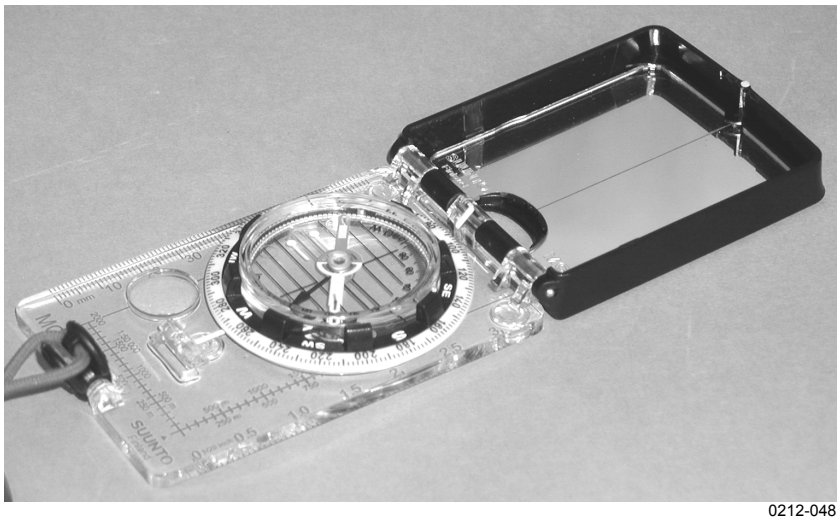

0212-048

Figure 5 Suunto Compass MC-2

Compass Alignment with a Mast Adapter

The following steps aim the wind sensor when using the 1-inch adapter for mounting.

1. Use the compass to determine that the N-S transducer heads of the ultrasonic wind sensor are exactly in line with the compass. Adjust the heads by moving them to the left or right. For the correct ground position of the installer, see Figure 7 on page 27.
2. If the alignment is not correct, lower the tower.
3. Loosen the clamp at the bottom of the sensor's adapter and rotate the sensor so that the heads marked with the N and with the S are exactly aligned to north and south when the tower is set up. Tighten the clamp.
4. Raise the tower to the vertical position. Figure 6 below shows the correct alignment.

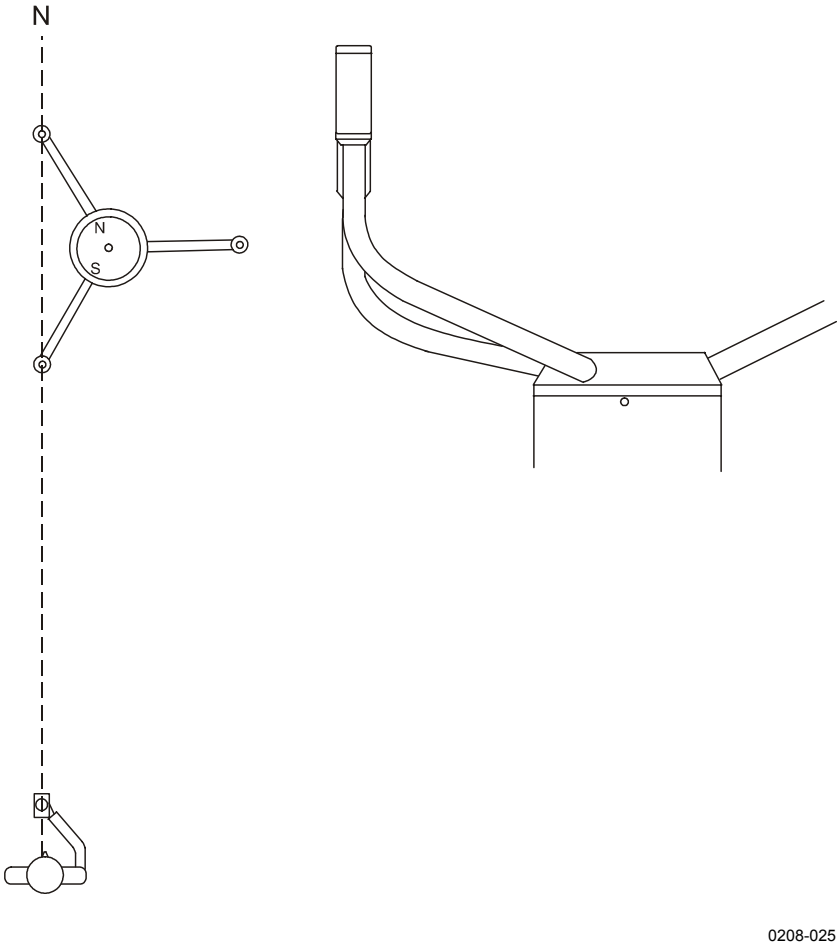

Figure 6 Correctly Aligned WS425 Ultrasonic Wind Sensor

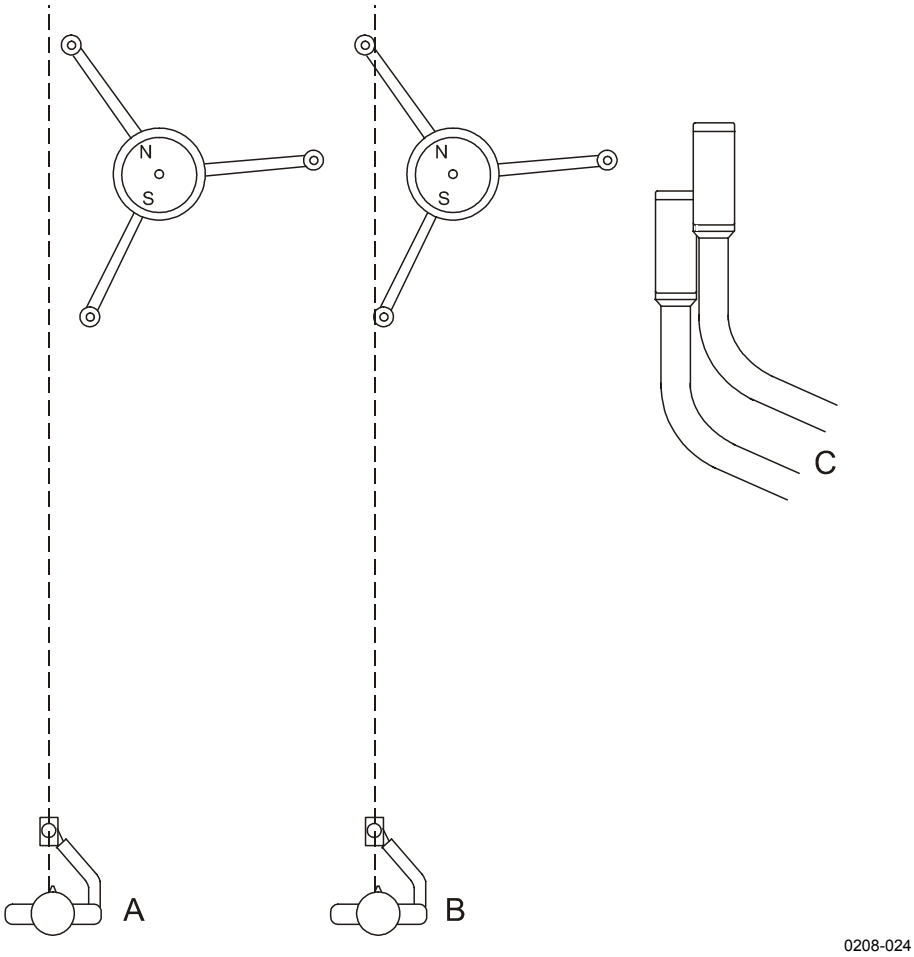

Figure 7 Adjusting the N-S Heads

The following letters refer to Figure 7 above.

A = The installer is too far to the left.
B = The installer is in line with the sensor.
C = The sensor's appearance is shown when the installer is in the correct position. The sensor, however, is not correctly aligned.

Connections

WS425 has a 16-pin circular plastic connector (male) at the bottom of the sensor. A cable connector of type AMP206037-1 can be used to attach wires to the sensor pins.

Table 8 on page 28 illustrates usage of the pins with different protocols.

Table 8 WS425 Sensor Pins

Sensor Pin No.	Protocol				
	RS-232	**RS-422**	**RS-485**	**Analog**	**SDI-12**
1	GND	GND	GND	GND	GND
2	GND	GND	GND	GND	GND
3	GND	GND	GND	GND	GND
4		-	-	-	-
5	-				-
6					-
7					GND
8	GND	GND	GND	GND	GND
9	Data out (TxD)	Data out (T-)	RT-	-	-
10	Data in (RxD)	Data in (R-)	RT-	-	SDI data
11	+12 VDC	+12 VDC	+12 VDC	+12 VDC	+12 VDC
12	-	Data out (T+)	RT+	WD Vref in	-
13	-	-	-	WD Vout	-
14	-	Data in (R+)	RT+	WS Fout	-
15	-	-	-	WS Vout	-
16	+36 VDC	+36 VDC	+36 VDC	+36 VDC	+36 VDC

NOTE The short-circuits between pins 5, 6, and 7 are required for selecting the protocol.

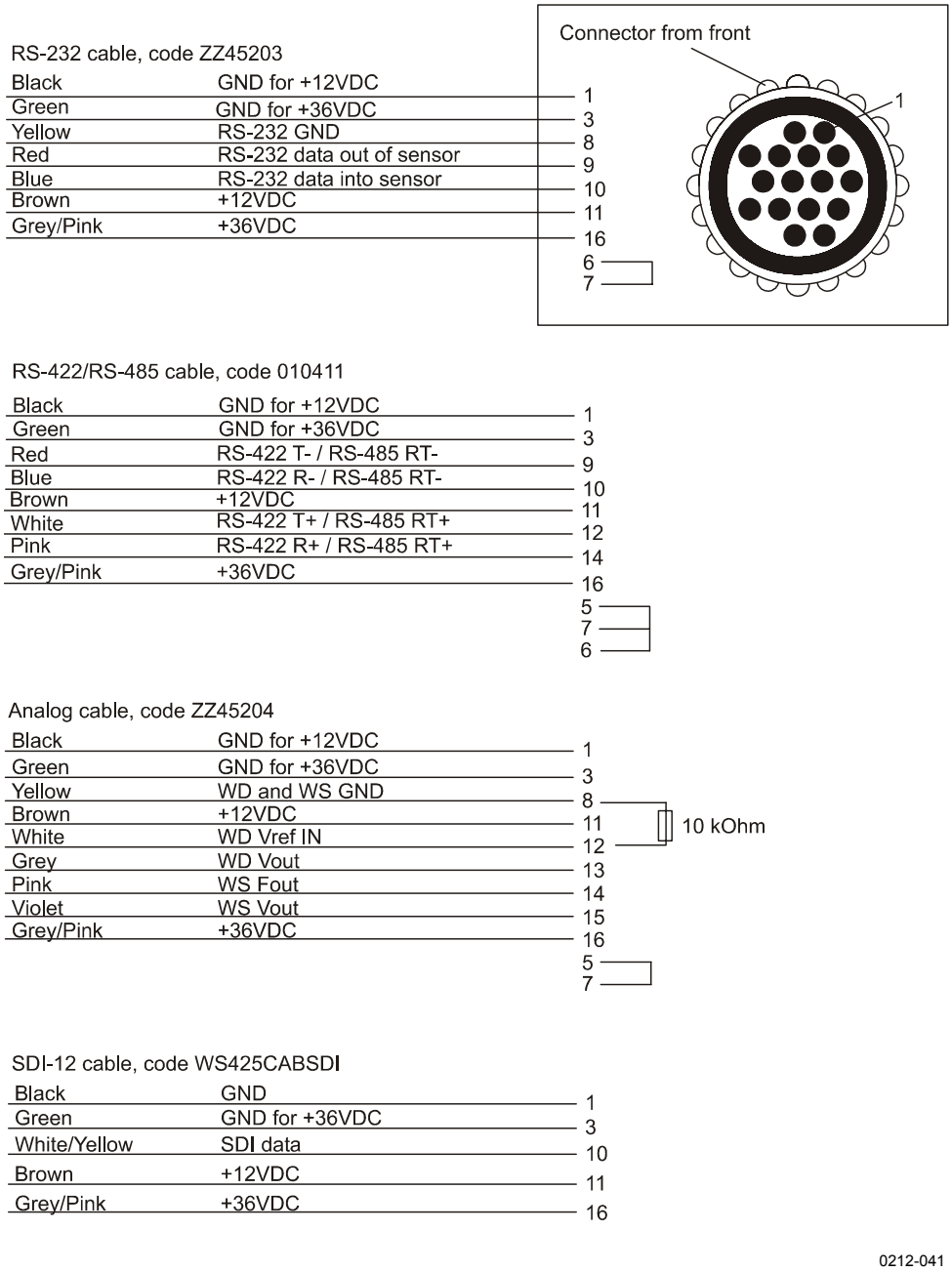

Figure 8 Open-Lead Cables for WS425 Sensors

The following 10-meter cables are available from Vaisala. Choose the cable according to the desired communication protocol.

Powering

Power Supplies

You can use any 12 VDC power supply with the unheated Ultrasonic Wind Sensors, as long as it meets all applicable safety regulations. Typically, the power supply is a fused 12 V battery with either a solar panel charger or a trickle charger.

NOTE	Some DC power supplies are based on a chopper circuit that operates at a 100 kHz frequency. Avoid using such power supplies with WS425 since the measurement can be distorted by the ripple in the DC output.

The heated ultrasonic wind sensors require +12 VDC for the sensor and +36 VDC for the heater.

CAUTION	The heated Ultrasonic Wind Sensor is intended for operation when pin 16 is connected to a +36 VDC source. If you are operating WS425 when pin 16 is not connected to +36 VDC, you must ground pin 16. Never float pin 16 on WS425 because the sensor will not report accurate readings.

CHAPTER 4

OPERATION

Analog Mode

The WS425 Ultrasonic Wind Sensor can be used as a conventional wind set that gives instantaneous readings. The sensor is normally powered down. When power is first turned on, it takes about two seconds for the sensor to initialize and stabilize. Then the sensor takes a 0.35-second measurement and synthesizes the analog outputs of wind speed and wind direction. The cycle is repeated every second until power is turned off.

Wind Speed

The factory sets the wind speed unit of the analog mode to miles per hour. This is the only option available for the analog mode.

The wind speed output at pin 14 is 0 to 12 V pulsed output with a frequency proportional to wind speed. Every mile per hour adds 5 Hz to the frequency. In SI units, a change of 0.894 m/s adds 10 Hz to the frequency. A frequency counter is required to count the output in Hz and the calculation that scales the result to appropriate units.

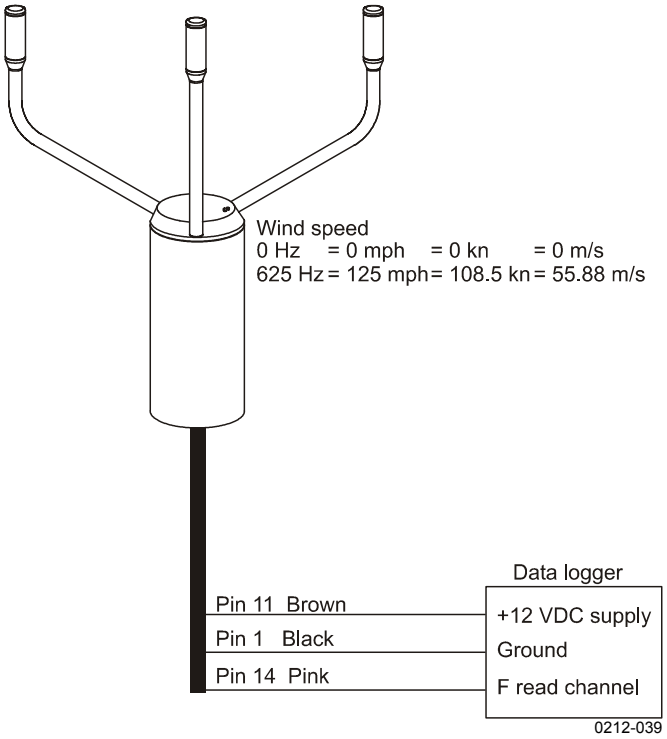

Figure 9 Frequency Connection

The wind speed output at pin 15 is a voltage that varies linearly from 0 VDC at 0 mph to 1 VDC at 125 mph. In SI units, the voltage varies linearly from 0 VDC at 0 m/s to 1 VDC at 55.88 m/s.

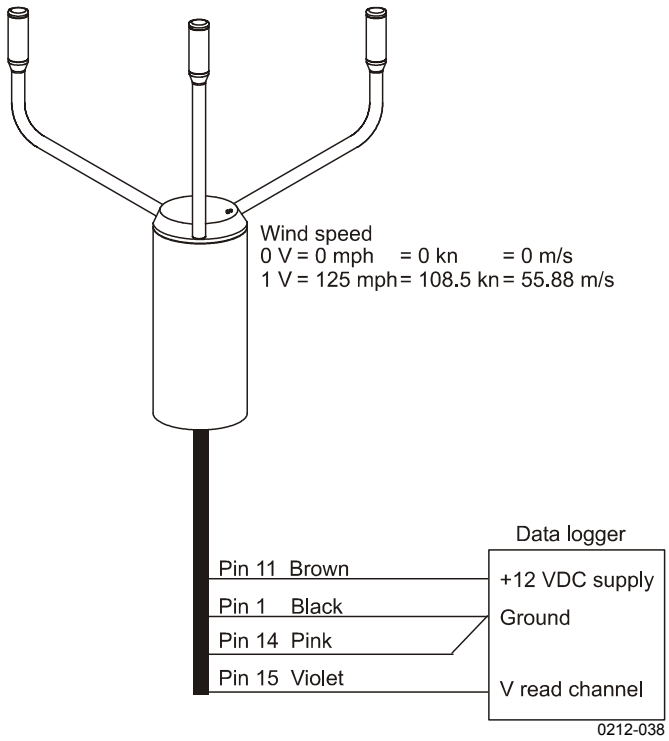

Figure 10 Wind Speed

NOTE	The wind speed voltage output cannot be used simultaneously with the frequency output. If the voltage output pin 15 is used, the frequency output pin 14 must be connected to ground, see Figure 10 above.

Wind Direction

The DC reference voltage that inputs the sensor at pin 12, produces a voltage that represents the wind position. The reference voltage must be in the range of 1.0 to 5.0 VDC. The output at pin 13 is 0 VDC at zero degrees and increases to the maximum input voltage at 359 degrees.

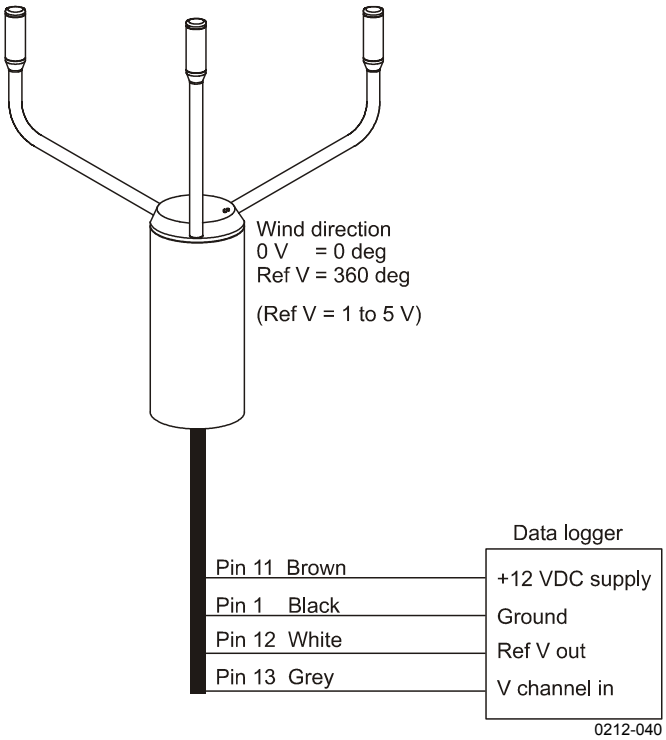

Figure 11 Analog Connection

Missing Readings

For analog outputs, the wind speed is set to 125 mph when a reading is missing.

Serial Mode

Overview

You can use any computer or data logger that has a serial port to collect the sensor data by using the serial commands. The communication speed, parity, and number of data bits for the serial line can be selected by the user. The sensor can be set to transmit data messages at predefined intervals (autosending) or it responds to a polling string, which is specific to a selected output message format. Various operational parameters can be set through a terminal connection.

NOTE Since the serial line settings may not be known for a device, the settings are held as constant for the first five seconds after powering up the sensor. During this time, the sensor responds to commands issued with settings such as 9600 bit/s, 8 data bits, parity None, 1 stop bit.

Serial Mode Default Settings for the USA

Vaisala WS425 Ultrasonic Anemometer, Firmware Version v6.04.

Operation Mode:	Handar RS232
Wind Speed Units:	Miles/Hour
Average Interval (seconds):	1
Averaging Method:	Scalar
Output Interval (seconds, 0 for polled):	0
Sensor ID Character:	A
Wind Direction Coast Threshold (speed units):	0.0
Head Orientation:	Up
Baud Rate:	2400b
Parity:	None
Data Bits:	8
Save Configuration	
Do Zero Speed Calibration	
Resume Operation	

NOTE These default settings for the USA are used for product ordering options x1xxx (for example, WS425 A1A2A, where number 1 refers to the default settings.)

Serial Mode Default Settings for Europe

Operation Mode:	NMEA Extended
Wind Speed Units:	Meters/Second
Average Interval (seconds):	3
Averaging Method:	Scalar
Output Interval (seconds, 0 for polled):	1
Sensor ID Character:	A
Wind Direction Coast Threshold (speed units):	0.0
Head Orientation:	Up
Baud Rate:	9600b
Parity:	None
Data Bits:	8

NOTE These default settings for Europe are used for product ordering options x2xxx (for example, WS425 A2A1A, where the number 2 refers to the default settings).

Configuration Menu

The configuration menu can be opened by typing

`Open` or `Open <id>`

where

`<id>` is the identification character of the sensor.

If the sensor has been running for more than five seconds, use the currently active baud rate and other communication settings. There is a short timeout in typing in the characters. Therefore, type the **OPEN** command followed by **ENTER** relatively fast.

The **OPEN** command displays the following menu:

```
Vaisala WS425 Ultrasonic Anemometer
Firmware Version v6.00

1.  Operation Mode: WAT11
2.  Wind Speed Units: Meters/Second
3.  Average Interval (seconds): 3
4.  Averaging Method: Vector
5.  Output Interval (seconds, 0 for polled): 0
6.  Sensor ID Character: A
7.  Wind Direction Coast Threshold (speed
    units): 1.0
8.  Head Orientation: Up
```

```
9.  Baud Rate: 9600b
10. Parity: None
11. Data Bits: 8
12. Save Configuration
13. Do Zero Speed Calibration
14. Resume Operation

Enter Function Number:
```

Each configuration parameter is displayed together with the currently active setting. The configuration parameters can be changed by selecting the number of the parameter followed by **ENTER**.

NOTE	After modifying the parameters, type 12 for storing the new parameter values and 14 to exit the configuration menu and to return to the measurement mode.

Configuration Commands

The first parameter selects the message format and polling commands for the sensor. The available options are:

a. Handar RS232

b. NMEA Standard

c. NMEA Extended

d. WAT11

Handar RS232

When the sensor uses the Handar RS232 message, it responds to polling commands used for requesting data from the sensor. Table 9 below summarizes these commands.

Table 9 The Handar RS232 Polling Commands

Command	Name	Page
I	Identify	38
Wx	Measurement	38
Ux	Measurement unit change	39

Identify Command I

The identify command is **I**.

The following is an example of the command:

```
I
VAISALA WS425A/AH 600
```

Vaisala WS425A/AH is the vendor and model number, 600 is version 6.00 of models WS425A/AH.

Measurement Command Wx

The measurement command is **Wx** where x is the time for averaging wind speed and wind direction. x has a range of 1 to 9.

The following is an example of the command:

```
W5
☻W5P1200013.2TDE♥
```

The interpretation of the output message is described in the Table 10 below.

Table 10 The RS-232 19-character Fixed Length Output Message

Character position	Message
1	“☻” 02H (<STX>, start of transmission)
2	“W”
3	“5” for 5-second running average
4	“P” for “pass” “F” for “fail”
5	Wind direction (most significant digit)
6	Wind direction (middle digit)
7	Wind direction (least significant digit)
8	Wind speed (most significant digit)
9	Wind speed (next digit)
10	Wind speed (next digit)
11	Wind speed (least significant digit)
12	“.” (dot character)
13	Wind speed (tenth digit)
14	“M” for miles per hour; “K” for knots “L” for kilometers per hour; “T” for meters per second
15	Check sum (most significant digit) (See note)
16	Check sum (least significant digit)
17	“♥” 03H (<ETX>, end of transmission)
18	[CR] (carriage return)
19	[LF] (line feed)

NOTE	The checksum is calculated from 13 characters from position 2 through 14. The accumulator initializes at 0 with the addition of the byte value. The checksum has a range of 0H … FFH.

Missing Readings

If data is missing due to a measurement problem, Handar RS-232 message reports 999.9 for wind speed.

NOTE	The sensor has a 20 ms timeout in receiving characters. Therefore, polling strings should be transmitted by a programmable device, not as a user command via terminal sessions.

Measurement Unit Change Command Ux

The measurement unit change command is **Ux**.

where

x = 0, for miles per hour, [mph]
x = 1, for knots (default), [knot]
x = 2, for kilometers per hour, [km/h]
x = 3, for meters per second, [m/s]

The following is an example: `U3`

It sets meters per second for wind speed.

NMEA Standard

The standard variable length, comma-separated, MWV wind message is defined by NMEA 0183 V2.20 as follows:

```
$WIMWV,<dir>,<ref>,<spd>,<uni>,<sta>*<chk><cr><lf>
```

where

$WIMWV	=	Fixed text
<dir>	=	Wind angle, 0 to 359 degrees
<ref>	=	Reference; R=Relative, T=True
<spd>	=	Wind speed
<uni>	=	Wind speed units; K = kmph [km/h], M = mps [m/s], N = kt
<sta>	=	Status; A = Data Valid, V = Invalid Data
*	=	Fixed text
<chk>	=	Checksum (8-bit XOR, excluding $ and *)
<cr>	=	Carriage return code, ASCII 0DH
<lf>	=	Line feed code, ASCII 0AH

NOTE When the NMEA Standard message format is selected, the sensor must have a non-zero output interval setting (parameter 5 in the configuration menu) since no polling command is defined for this message type.

Missing Readings

If data is missing due to a measurement problem, the NMEA messages will only show the commas (,) between the data fields. Thus, NMEA is a variable-length data message.

NMEA Extended Message

Vaisala extension to the standard MWV wind message is defined as follows:

```
$P<id>MWV,<dir>,<ref>,<spd>,<uni>,<sta>*<chk><cr><lf>
```

where

$P	=	Fixed text
<id>	=	Is the data ID; A … Z
MWV	=	Fixed text
<dir>	=	Wind angle, 0 to 359 degrees
<ref>	=	Reference; R = Relative, T = True
<spd>	=	Wind speed
<uni>	=	Wind speed units; K = kmph [km/h], M = mps [m/s], N = kt
<sta>	=	Status; A = Data Valid, V = Invalid Data
*	=	Fixed text
<chk>	=	Checksum (8-bit XOR, excluding $ and *)
<cr>	=	Carriage return code, ASCII 0DH
<lf>	=	Line feed code, ASCII 0AH

NOTE The sensor has a 20 ms timeout in receiving characters. Thus, polling strings should be transmitted by a programmable device, not as a user command via terminal sessions.

In NMEA Extended Message, the polling can be done using the following command:

```
$WIP<id>Q,*<chk><cr><lf>
```

where

$WIP	=	Fixed text
<id>	=	Is the data ID; A … Z
Q	=	Fixed text
*	=	Fixed text
<chk>	=	Checksum (8-bit XOR, excluding $ and *)
<cr>	=	Carriage return code, ASCII 0DH
<lf>	=	Line feed code, ASCII 0AH

Table 11 Checksum Table

ID Character <id>	Checksum <chk>	Polling String
A	72	$WIPA,*72<cr><lf>
B	71	$WIPB,*71<cr><lf>
C	70	$WIPC,*70<cr><lf>
D	77	$WIPD,*77<cr><lf>
E	76	$WIPE,*76<cr><lf>
F	75	$WIPF,*75<cr><lf>
G	74	$WIPG,*74<cr><lf>
H	7B	$WIPH,*7B<cr><lf>
I	7A	$WIPI,*7A<cr><lf>
J	79	$WIPJ,*79<cr><lf>
K	78	$WIPK,*78<cr><lf>
L	7F	$WIPL,*7F<cr><lf>
M	7E	$WIPM,*7E<cr><lf>
N	7D	$WIPN,*7D<cr><lf>
O	7C	$WIPO,*7C<cr><lf>

NOTE When using the sensor in the NMEA Extended mode, you can either set the output interval to zero (parameter 5 in the configuration menu) to enable polling or use some fixed output interval.

WAT11 Message

The fixed length format of the WAT11 message is defined as follows:

```
<stx><id><spd><dir>
```

where

<stx>	=	Start of text character (1 digit)
<id>	=	Sensor identification character, for example, A (one digit).
<spd>	=	Wind speed (in m/s) multiplied by 10, for example, 045 is 4.5 m/s (three digits)
<dir>	=	Wind direction with two octal numbers for 6-bit binary data, for example, $45_8 = 37_{10}$ corresponds to 37/64*360 = 208 degrees

The WAT11 polling command is defined as follows:

```
<esc><id>
```

where

<esc>	=	Escape character ASCII 27H
<id>	=	Sensor ID, for example, A.

Missing Readings

The WAT11 message reports missing data as slashes (/////).

NOTE	The sensor has a 20 ms timeout in receiving characters. Therefore, polling strings should be transmitted by a programmable device, not as a user command via terminal sessions.

Wind Speed Units

There are four wind speed units available:

a. Miles/hours

b. Knots

c. Kilometers/hours

d. Meters/seconds

NOTE	When the operation mode is WAT11 (selected from the configuration parameter 1), the only option for the wind speed unit is meters/second as the WAT11 message does not contain wind speed unit information.

Average Interval

The averaging interval can be selected as full seconds between 1 and 9 seconds. For the WS425 sensor, the time between each consecutive wind direction measurement is one second. Each wind direction measurement taken over the preceding averaging interval is summed and the sum is divided by the number of measurements.

The same averaging interval is used for both the average wind speed and average wind direction.

The sensor computes a true running average. If the data acquisition system requests data before the initial averaging interval completes, the sensor returns the best possible running average.

Averaging Method

These settings affect the calculation of wind speed and direction. The available options are as follows:

a. Scalar averaging

b. Vector averaging

Scalar Averaging

When the scalar averaging is selected, the wind direction is a circular function with a discontinuity at due north, where 360° is equal to 0°. For example, 359° + 5° = + 4° and 0° - 5° = 355°.

The microprocessor translates this circular function to a linear function, that is, 359° + 5° is translated to 364° and 0° - 5° translates to - 5°.

To calculate the scalar average wind direction, each translated wind direction measurement taken over the preceding averaging interval is summed and the sum is divided by the number of measurements.

Vector Averaging

Each x velocity and y velocity measurement over the averaging interval is added and then divided by the number of measurements. The resulting average x velocity and average y velocity are converted to polar direction and magnitude, returning as average direction in degrees and speed in the chosen units.

Output Interval

The output interval can be selected in full seconds between 1 and 9 seconds. These settings are independent of the averaging interval (configuration parameter 3, see section Average Interval on page 44). Regardless of the length of the output interval, the last measurement sample before transmission is always the last sample of the averaging window. Therefore, the transmitted data is always based on the latest measurements.

If the output interval is set to zero (0), polling is used in data acquisition.

NOTE	When using the NMEA Standard as the operating mode (configuration parameter 1), there must be a non-zero setting for output interval since polling is not supported in the NMEA Standard mode.

Sensor ID Character

The sensor ID character must be a single capital letter from A to Z. Numbers or small letters are not accepted. After an ID is defined for a sensor, the configuration menu can be opened by typing `open <id>`.

This is useful if several sensors are sharing the same communication line. When running the NMEA Extended or WAT11 mode, the sensor ID is part of the polling string.

Wind Direction Coast Threshold

At very low wind speeds, the measured wind direction is meaningless. Therefore, you can specify a direction coast speed. When the measured wind speed drops below the direction coast speed, the calculations use the last wind direction that occurred while the wind speed WS at or above the direction coast speed to average wind direction. You can specify a direction coast speed between 0.0 and 9.9 units of measurement. Use 0.0 if coasting is not required.

For example, the direction coast speed = 2.0. Consecutive measurements are as presented in Table 12 below.

Table 12 Consecutive Measurements of Wind Direction

Measured Wind Speed	Measured Wind Direction	Wind Direction Used for Averaging
3.5	350	350
2.5	340	340
2.2	340	340
1.9	175	340 (coasting)
1.2	045	340 (coasting)
2.1	345	345

NOTE The wind direction coast threshold can be set to a non-zero value only when the averaging method (configuration parameter 4) is set to scalar.

Head Orientation

The sensor can be installed either transducers up or transducers down. The wind direction calculation requires that the installation position is configured correctly to the sensor.

Bit Rate

The following options are available:

- 1200b
- 2400b
- 4800b
- 9600b
- 19200b

The new bit rate setting is activated as soon as the configuration changes are saved (selection 12) and operation is resumed (selection 14).

NOTE	For the first 5 seconds after powering up the sensor, the serial line parameters are 9600b, 8, N, 1.

Parity

The following options are available:

- None
- Odd
- Even

Data Bits

The available options are 7 or 8 data bits.

Save Configuration

After adjusting one of the configuration parameters, apply this function to save the new settings.

Zero Speed Calibration

The zero speed calibration is done to all sensors in the factory before delivery. There is no reason to perform this tuning periodically. Instead, use the margin verifier for periodic testing as described in section Periodic Testing on page 67. Do the zero speed calibration only after possible firmware update or if the periodic test indicates too high wind speeds.

To perform the zero speed calibration, do the following:

1. Remove the bird spikes and install the verifier as described in Figure 13 on page 69.
2. Select zero speed calibration from the configuration menu and wait until the sensor resumes to normal operation.
3. Check that the sensor passes the periodic test.

CAUTION	Do not perform the zero speed calibration unless the margin verifier is mounted on the sensor. Use this function only if you suspect that the sensor characteristics have changed.

Resume Operation

After opening the configuration menu, return to the current mode of operation by selecting "Resume Operation". This selection terminates the configuration dialog.

NOTE	Changes to the configuration will not be saved automatically. Use the **SAVE CONFIGURATION** command to save the changes.

SDI-12 Protocol

SDI-12 is a standard for interfacing data recorders with microprocessor-based sensors. The name stands for serial/digital interface at 1200 baud. SDI-12 is intended for applications with the following requirements:

- Battery-powered operation with minimal current drain.
- Low system cost.

- Use of a single data recorder with multiple sensors on one cable.
- Up to 200 feet (60 meters) of cable between a sensor and a data recorder.

SDI-12 Support Group

The SDI-12 Support Group is an association of companies that produce and use SDI-12 products with the purpose of reviewing requests to enhance, clarify, or modify the SDI-12 architecture and that votes on proposed changes to SDI-12. More information of the group, as well as the complete SDI-12 standard text is available from the SDI-12 web-site in the following address: www.sdi-12.org/.

SDI-12 Electrical Interface

The SDI-12 electrical interface uses the SDI-12 bus to transmit serial data between SDI-12 data recorders and sensors. The SDI-12 bus is the cable that connects multiple SDI-12 devices. This is a cable with three conductors:

- A serial data line
- A ground line
- A 12-volt line

NOTE	With Vaisala SDI-12 cable, code WS425CAB SDI the lead colors are as follows: data - whi/yel; ground - Blk; and 12-volts - Brn.

The SDI-12 bus is can have at least 10 sensors connected to it. The bus topology is a parallel connection, where each of the 3 wires of different sensors are connected in parallel.

Serial Data Line

The data line is a bi-directional, three-state, data transfer line. Table 13 on page 50 shows the logic and voltage levels for the transmission of serial data for the SDI-12 standard. The data line uses negative logic.

Table 13 Logic and Voltage Level for Serial Data

Condition	Binary State	Voltage Range
Marking	1	-0.5 to 1.0 volts
Spacing	0	3.5 to 5.5 volts
Transition	Undefined	1.0 to 3.5 volts

Voltage Transitions

During normal operation, the data line voltage slew rate must not be greater than 1.5 volts per microsecond.

Impedance

When an SDI-12 device has its transmitter on, its direct current (DC) source resistance must be greater than 1000 ohms and less than 2000 ohms. When the transmitter of any SDI-12 device is off, or in a low-power standby mode, the DC resistance to ground must be within 160 K to 360 K ohms. If an SDI-12 sensor does not use the 12-volt line for power, its data line resistance to ground while powered down must be within 160 K to 360 K ohms.

SDI-12 Communications Protocol

SDI-12 data recorders and sensors communicate by an exchange of ASCII characters on the data line. The data recorder sends a break to wake up the sensors on the data line. A break is continuous spacing on the data line for at least 12 milliseconds. The data recorder then sends a command. The sensor, in turn, returns the appropriate response. Each command is for a specific sensor. The first character of each command is a unique sensor address that specifies with which sensor the recorder wants to communicate. Other sensors on the SDI-12 bus ignore the command and return to low-power standby mode. When a data recorder tells a sensor to start its measurement procedure, the recorder does not communicate with any other sensor until the data collection from the first sensor is complete.

A typical recorder/sensor measurement sequence proceeds in the following order:

1. The data recorder wakes all sensors on the SDI-12 bus with a break.
2. The recorder transmits a command to a specific, addressed sensor, instructing it to make a measurement.

3. The addressed sensor responds within 15.0 milliseconds returning the maximum time until the measurement data will be ready and the number of data values it will return.
4. If the measurement is immediately available, the recorder transmits a command to the sensor instructing it to return the measurement(s). If the measurement is not ready, the data recorder waits for the sensor to send a request to the recorder, which indicates that the data is ready. The recorder then transmits a command to get the data.
5. The sensor responds, returning one or more measurements.

Baud Rate and Byte Frame Format

The baud rate for SDI-12 is 1200 b. Table 14 below shows the byte frame format for SDI-12.

Table 14 Byte Frame Format for SDI-12

1 start bit
7 data bits, least significant bit transmitted first
1 parity bit, even parity
1 stop bit

Two Different Submodes

Vaisala WS425 is designed to work in two different operational modes when running the SDI-12 protocol. These modes will be called "submode A" and "submode B". This arrangement makes it possible to do the following:

- Keep the sensor in a sleep mode when measurement is not active, thus enabling a very low-power operation of the sensor (submode A).
- Initiate periods where continuous measurement is made. Long averages (up to 1 hour) of wind speed and direction, as well as gust data is available during this period (submode B).

As a default, the sensor runs in submode A. Specific commands can be issued in order to:

- Set the sensor into submode B and initiate continuous measurement.
- Collect averaged data in submode B.
- Force the sensor back to submode A.

If a sensor is not forced back to the low-power submode A by the data logger, the sensor will eventually do this independently after two hours have elapsed. The timing diagram is illustrated in Table 15 below.

Table 15 SDI Timing Chart

Data Logger Command	Time [s]	Sensor Response	Comment
aXQx;c.c;yyyy!	0	(Sensor in submode A.) a<cr><lf>	Place sensor into submode B. yyyy is the averaging time.
aR0!	h	(Sensor in submode B.) a<WS><WD><GS><GD><cr><lf>	Continuous measurements (if time is shorter than yyyy, only partial data is available).
aXS!	3600	(Sensor in submode B.) a<cr><lf> (Sensor in submode A.)	Force the sensor back to submode A. If aXS! was not given, the timer resets the sensor to submode A.

Standard SDI-12 Commands Supported by WS425

Acknowledge Active Command (a!)

This command is used to ensure that a sensor is responding to a data recorder or another SDI-12 device. It asks a sensor to acknowledge its presence on the SDI-12 bus.

The command is the following:

```
a!
```

where

a	=	The sensor address.
!	=	Terminates the command.

The response is the following:

```
a<CR><LF>
```

where

a	=	The sensor address. The default values is zero (0).
<CR><LF>	=	Terminates the response.

The following is an example of the command:

```
0!
```

The following is an example of the response:

```
0<CR><LF>
```

Send Identification Command (aI!)

This command is used to query sensors for their SDI-12 compatibility level, model number, and firmware version number.

The following is an example of the command:

```
aI!
```

where

a	=	The sensor address.
I	=	The send identification command
!	=	Terminates the command.

The following is an example of the response:

```
allcccccccccmmmmmmmvvvxxx . . . xxx<CR><LF>
```

where

a	=	The sensor address.
ll	=	The SDI-12 version number, indicating SDI-12 version compatibility; for example, version 1.1 is encoded as 11.
cccccccc	=	An 8-character vendor identification Vaisala_
mmmmmm	=	6 characters specifying the sensor model number WS425.
vvv	=	3 characters specifying the firmware version 604.
For example, xxx ... xx	=	An optional field, up to 13 characters, used for a serial number or other specific sensor information that is not relevant for operation of the data recorder (not used).
<CR><LF>	=	Terminates the response.

Address Query Command (?!)

When a question mark (?) is used as the address character with the acknowledge active command (**a!**), the sensor will respond as if it is being addressed on the SDI-12 bus. For example, if a sensor detects **?!**, it will respond with `a<CR><LF>`, no matter what its address may be. This will allow a user to determine the address of a sensor. The user should understand that if more than one sensor is connected to the bus, they will all respond, causing a bus contention.

The command is the following:

```
?!
```

where

?	=	Wildcard.
!	=	Terminates the command.

The response is the following:

```
a<CR><LF>
```

where

a	=	The sensor address.
<CR><LF>	=	Terminates the response.

Change Address Command (aAb!)

This command changes the address of a sensor. After this command has been issued and responded to, the sensor is not required to respond to another command for one second. This gives the sensor time to write the new address to non-volatile memory.

The command is the following:

```
aAb!
```

where

a	=	The sensor address.
A	=	The change address command.
b	=	The address to change to.
!	=	Terminates the command.

The response is the following:

```
b<CR><LF>
```

where

b	=	The address of the sensor (will equal the new address or the original address if the sensor is unable to change the address).
<CR><LF>	=	Terminates the response.

Start Measurement Command (aM!)

With this command, the sensor will make a measurement. The sensor will not return the measurement to the data recorder after this command. It shows the time after which the measurement result can be retrieved using the **D0!** command and it also shows the number of parameters. The following is an example:

```
 >0M!
00015
```

The **SEND DATA** (**D0!**) command must be issued to get the measurements.

The command is the following:

```
aM!
```

where

a	=	The sensor address.
M	=	The start measurement.
!	=	Terminates the command.

The response is the following:

```
atttn<CR><LF>
```

where

a	=	The sensor address.
ttt	=	The specified time, in seconds, until the sensor will have the measurement ready (001).
n	=	The number of measurement values the sensor will make and return in one or more subsequent D commands (5).
<CR><LF>	=	Terminates the response.

Send Data Command (aD0!)

This command is used to get instant data from the sensor. **D0!** must be preceded with an **M!** command or an **V!** command. The sensor

responds by sending measurement data (after **M!**) or verification data (after **V!**).

In a SDI-12 system compliant with the standard, if the expected number of measurements is not returned in response to a **D0!** command, a data recorder issues **D1!**, **D2!**, and so on until all measurement values are received. The expected number of measurements is the one that WS received by the data recorder in response to an **M!** or **V!** command. Multiple data requests are not needed with WS425, since all return values fit easily into one response string.

The command is the following:

```
aD0!
```

where

a	=	The sensor address.
D0	=	The send data command.
!	=	Terminates the command.

When the previous command **WS aM!** is given, the response is the following:

```
a<WS><WD><x><y><s><CR><LF>
```

where

a	=	The sensor address.
<WS>	=	Polar wind speed in selected units, format: +(ss)s.s
<WD>	=	Polar wind direction in degrees, format +(dd)d
<x>	=	x component of wind speed in selected units, format: ±(ss)s.s
<y>	=	y component of wind speed in selected units, format: ±(ss)s.s
<s>	=	Static speed of sound in mph, format: ±(ss)s.s
<CR><LF>	=	Terminates the response.

The above are measurement data fields.

When the previous command **WS aV!** is given, the response is the following:

```
a<watchdog><WS_unit><SDI-mode><spare><CR><LF>
```

where

a	=	The sensor address.
<watchdog>	=	The number of times the watchdog has triggered. Ideally should be zero. Format: +(c)c
<WS_unit>	=	Wind speed unit. The options are: +0 = mph +1 = kt +2 = km/h +3 = m/s
<SDI-mode>	=	Current submode setting. The options are: +0 = SDI-12 submode A +1 = SDI-12 submode B
<spare>	=	1 digit for factory use, format: +c
<CR><LF>	=	Terminates the response.

The above are verification data fields.

Continuous Measurements (aR0!)

A sensor that is able to continuously monitor the phenomena to be measured, does not require a start measurement command (**M!**). The data can be read directly with the **R0!** command.

WS425 uses this command when the sensor is set to work in SDI-12 submode B. The command retrieves averaged wind data and gust wind data. The averaging time window is selectable between 3 and 3600 seconds.

The command is the following:

```
aR0!
```

where

a	=	The sensor address.
R0	=	The send continuous measurements command.
!	=	Terminates the command.

The response is the following:

```
a<WS_ave><WD_ave><GS><GD><CR><LF>
```

where

a	=	The sensor address.
<WS_ave>	=	Average wind speed over the past yyyy[1] seconds in currently active units. Format: +(ss)s.s
<WD_ave>	=	Average wind direction over the past yyy[1] seconds in degrees. Format +(dd)d
<GS>	=	Gust wind speed; the highest n[1] measurement running average during the past yyyy[1] seconds, in currently active units. Format: +(ss)s.s
<GD>	=	Gust direction; n[1] second average over the same time period as the gust speed. Format: +(dd)d.
<CR><LF>	=	Terminates the response.

1) The parameters **yyyy** and **n** are issued to the sensor as a part of the "Place sensor in submode B (**aXQx;c.c;n;yyyy!**)" command. This command must be given to the sensor before aR0!. See the command description for **aXQ...!** for full description of the parameters.

Start Verification (aV!)

This command tells the sensor to return a verification in response to a following **D0!** command. The WS425 verification data includes a watchdog count, sensor measurement unit settings and the current SDI mode setting.

The command is the following:

```
aV!
```

where

a	=	The sensor address.
V	=	The start verification command.
!	=	Terminates the command.

The response is the following:

```
attn<CR><LF>
```

where

a	=	The sensor address.
tt	=	The time in seconds the sensor needs until it has the verification data ready (01)
n	=	The number of verification data fields that will be returned (4).
<CR><LF>	=	Terminates the response.

Vaisala-specific SDI-12 Commands Supported by WS425

Measurement Unit Change (aXUx!)

This command sets the desired measurement unit for wind speed. The command is available in submode A only.

The command is the following:

```
aXUx!
```

where

a	=	The sensor address.
XU	=	The change measurement unit command.
x	=	Desired wind speed unit. The options are: 0 = mph (default value) 1 = kt 2 = km/h 3 = m/s
!	=	Terminates the command.

The response is the following:

```
a+x<CR><LF>
```

where

a	=	The sensor address.
x	=	The new wind speed setting.
<CR><LF>	=	Terminates the response.

Heater Control Command (aXHx!)

This command switches the sensor heating into active or disabled state. In the active state, heating is still thermostatically controlled. The command works only for heated sensor models.

The command is the following:

```
aXHx!
```

where

a	=	The sensor address.
XH	=	The heater control command.
x	=	The options are: 0 = disable the heater 1 = enable the heater
!	=	Terminates the command.

The response is the following:

```
a<CR><LF>
```

where

a	=	The sensor address.
x	=	The new wind speed setting.
<CR><LF>	=	Terminates the response.

Check Current Submode (aX?!)

The command is the following:

```
aX?!
```

where

a	=	The sensor address.
X?	=	The check current submode command.
!	=	Terminates the command.

The response is the following:

```
a+x<CR><LF>
```

where

a	=	The sensor address.
x	=	The currently active submode. The options are: 0 = submode A 1 = submode B
<CR><LF>	=	Terminates the response.

Place Sensor in Submode B (aXQx;c.c;n;yyyy!)

This command sets the sensor into submode B which enables calculation of averaged wind data and gust wind speed and direction.

The command is the following:

```
aXQx;c.c;n;yyyy!
```

where

a	=	The sensor address.
XQ	=	The place sensor in submode B command.
x	=	The desired wind averaging method. The options are: 0 = use scalar averaging 1 = use vector averaging
c.c	=	The wind direction coasting threshold in the current wind speed units. The coasting can only be used with scalar averaging.
n	=	The number of samples that form the gust wind speed and direction value (1 Hz sampling). The valid range is 1 to 9.
yyyy	=	The length of averaging window [s]
!	=	Terminates the command.

The response is the following:

```
a<CR><LF>
```

where

a	=	The sensor address.
<CR><LF>	=	Terminates the response.

Reset the Sensor to Submode A Command (aXS!)

When the sensor is set to submode B in order to compute averaged wind data, the sensor will stay in mode B until a 2-hour time period has elapsed. This computation period can be aborted earlier by issuing the command **(XS!)**.

The command is the following:

```
aXS!
```

where

a	=	The sensor address.
XS	=	The reset sensor to submode A command.
!	=	Terminates the command.

The response is the following:

```
a<CR><LF>
```

where

a	=	The sensor address.
<CR><LF>	=	Terminates the response.

Check Current Measurement Unit (aX*!)

The command is the following:

```
aX*!
```

where

a	=	The sensor address.
X*	=	The check current measurement unit command.
!	=	Terminates the command.

The response is the following:

```
a+x<CR><LF>
```

where

a	=	The sensor address.
x	=	Currently active wind speed unit. The options are: 0 = mph 1 = kt 2 = km/h 3 = m/s
<CR><LF>	=	Terminates the response.

SDI-12 TIMING

The Figure 12 below shows a timing diagram for an SDI-12 command and its response. The tolerance for all SDI-12 timing is ±0.40 milliseconds. The only exception to this is the time between the stop bit of one character and the start bit of the next character. The maximum time for this is 1.66 milliseconds, with no tolerance.

- A data recorder transmits a break by setting the data line to spacing for at least 12 milliseconds.
- The sensor will not recognize a break condition for a continuous spacing time of less than 6.5 milliseconds. The sensor will always recognize a break when the line is continuously spacing for more than 12 milliseconds.
- When receiving a break, a sensor must detect 8.33 milliseconds of marking on the data line before it looks for an address.
- A sensor must wake up from a low-power standby mode and be capable of detecting a start bit from a valid command within 100 milliseconds after detecting a break.
- After a data recorder transmits the last character of a command, it must relinquish control of the data line within 7.5 milliseconds following the end of the stop bit. (Tolerance: +0.40 milliseconds.)

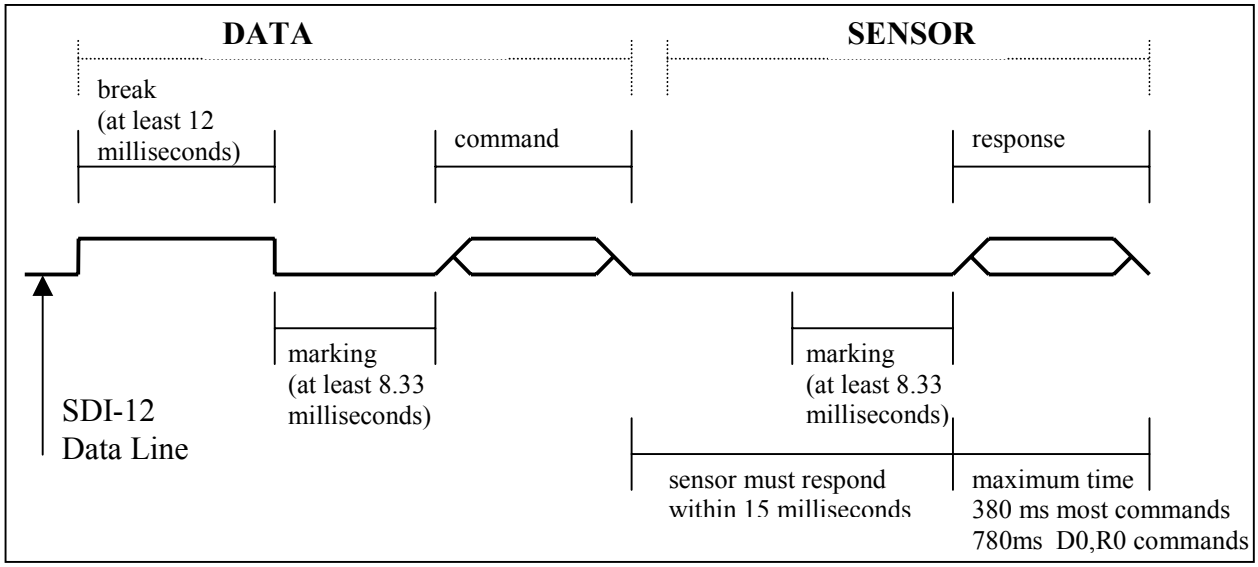

Figure 12 Timing Diagram

- After receiving the break and the command, the addressed sensor sets the data line to marking at 8.33 milliseconds and then send the response. (Tolerance: -0.40 milliseconds.) The start bit of the first response byte must start within 15 milliseconds after the stop bit of the last byte of the command. (Tolerance: +0.40 milliseconds.)
- After a sensor transmits the last character of a response, it must relinquish control of the data line within 7.5 milliseconds. (Tolerance: +0.40 milliseconds.)
- No more than 1.66 milliseconds of marking are allowed between the end of the stop bit and the start bit (e.g., between characters) on any characters in the command or the response. (No tolerance.) This permits a response to an M command to be sent within a 380-millisecond window.
- Sensors must return to a low-power standby mode after receiving an invalid address or after detecting a marking state on the data line for 100 milliseconds. (Tolerance: +0.40 milliseconds.)
- When a recorder addresses a different sensor, or if the data line has been in the marking state for more than 87 milliseconds, the next command must be preceded by a break.

NOTE	The low power standby mode, in addition to being a power consumption state, is a protocol state and a break is required to leave that state.

CHAPTER 5

MAINTENANCE

Periodic Testing

Section Measuring Principle on page 13 explains that the sensor measures how long it takes for an ultrasonic signal to travel from transmitter to receiver. Therefore, the accuracy of the sensor depends on the accuracy of two factors:

- The distance between the ultrasonic transmitter and receiver. This requires a measurement of the transducer arm trueness.
- The time-of-flight measurement circuit, which uses a crystal oscillator for its time reference.

NOTE	The crystal oscillator is used by the communications circuit for the bit rate generator. If you use the serial communication modes and the oscillator loses accuracy, the sensor stops communicating. Thus, the sensor cannot send erroneous values produced by faulty timing.

If you use the RS-232 operational modes, perform periodic testing to detect slow deterioration of the sensor before it significantly affects accuracy. Perform the test either in the field or in a laboratory. The periodic test uses the margin verifier, which is a small echo-free chamber with built-in, 10 dB sonic attenuators in each of the three sonic paths. The margin verifier is shown in Figure 13 on page 69.

This test verifies the following:

- Transducer arm trueness, since the verifier cannot be put into place if an arm is bent.
- Transmitter output power.
- Transmitter and receiver transducer efficiency.
- Receiver sensitivity.
- Acoustic crosstalk from any transmitter to any receiver.
- Electric crosstalk.
- Automatic gain threshold detectors.

This test demonstrates that the sensor will work at high wind speeds since the signal-to-noise ratio decreases as wind speed increases. As wind speed increases, turbulence increases acoustic noise. At the same time, acoustic lenses that form around the transducers (because of air pressure gradients) reduce the received signal.

Since the margin verifier decreases the signal-to-noise ratio to a slightly lower level than allowed by the sensor specification for the highest wind speed, a zero wind speed reading with the verifier in place indicates accurate readings at high wind speeds.

The test consists of the following steps:

1. Slip the margin verifier over the three transducers (see Figure 13 on page 69).
2. In outdoor conditions, secure the zero wind flow by covering the sensor and margin verifier.
3. The sensor must read less than 0.5 miles per hour (0.22 m/s) with the margin verifier in place.

NOTE	Some random data samples may be lost during the zero verifier test. This, however, does not indicate that the sensor is faulty.

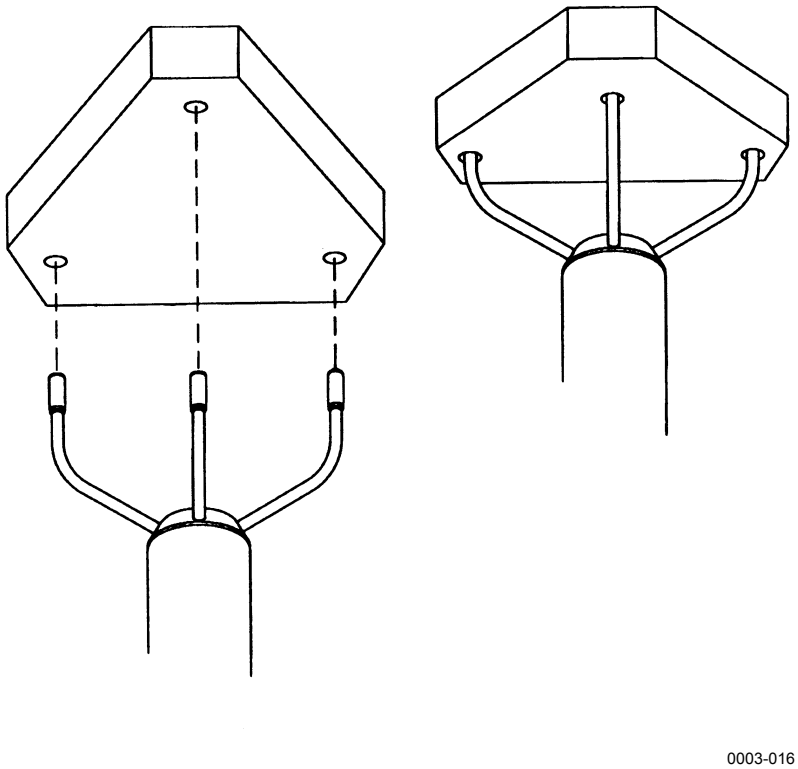

Figure 13 Margin Verifier

This page intentionally left blank.

CHAPTER 6

TROUBLESHOOTING

Common Problems

Frequently Asked Questions (FAQ)

Q = Question

A= Answer

Q:

I am looking for mounting options/products for the WS425 Ultrasonic Wind Sensor. Preferably, a tripod mount. If none is available, are there CAD files so we can design a tripod to fit this sensor?

A:

A drawing of an optional sensor adapter is included in Chapter 3 section Installation Procedure on page 19. This adapter fits onto an 1" IPS standard pipe. Following the dimensions of the adapter, you may prefer to design your own sensor mounting. See also a dimensional drawing of the sensor in Appendix A on page 79. Please make sure that no obstacles are near the sensor, especially at the level of the ultrasonic transducers.

Q:

We intend to install a WS425 to a radio link tower. Is the sensor sensitive to RF frequencies generated by GSM link antennas ?

A:

A radio link tower is an extremely demanding RF environment for any measurement device. The WS425 sensor has undergone electromagnetic compatibility tests in two different laboratories and is compliant with requirements of MIL-STD-461B and EN 61000-4-3. The tested frequency range spanned from 10 kHz to 10 GHz. The tested sensors were only disturbed by frequencies occurring at the band from 95kHz to 107kHz, which is the range that the sensor uses for the ultrasonic measurement. Radio communication devices do not operate at this band.

Despite the heavy testing, the GSM link equipment may cause interference to an ultrasonic sensor due to extremely high electromagnetic field levels around the transmission antenna. In this type of installation, a small displacement of the sensor may completely remove an interference problem that occurs at a certain point of the mast. Trial and error is really the only way of finding out whether RF disturbance will be an issue.

Q:

I have tried out my WS425. When I turn the power on the sensor is not sending any data. I used an RS232C checker but the Tx line is not active (no data is coming to my PC).

A:

By default, the sensor is set to a command-response mode (polling mode). This means that the sensor is waiting for a data request command from the data logger. If you want the sensor to automatically send data through the serial line, you need to open a maintenance connection to your WS425 sensor and configure parameter number 5, Output Interval, to have a non-zero value. In order to open a maintenance connection, see the attached procedure on the next page.

Instructions for Opening a Serial Terminal Connection to WS425

1. Connect an RS-232 cable between your terminal computer, power supply and your sensor. If you are using a Vaisala RS-232 cable with code ZZ45203, the cable colors are the following:

   Connections to power supply:

Black (WS425 pin 1)	-	Ground
Brown (WS425 pin 11)	-	+12 VDC

   Connections to terminal PC:

Red (WS425 pin 9)	-	RxD (PC 9-pin serial port, pin n:o 2)
Blu (WS425 pin 10)	-	TxD (PC 9-pin serial port, pin n:o 3)
Yellow (WS425 pin 8)	-	GND (PC 9-pin serial port, pin n:o 5)

2. Open the Windows HyperTerminal program. From HyperTerminal, select **File - Properties** and click **Configure**. Set communication parameters 9600,8,N,1 and **Flow Control** as None.
3. From HyperTerminal, select **View - Font**. Set **Font** as Terminal.
4. Select **Call - Disconnect**. Then select **Call - Connect**.
5. Switch the sensor power supply on and off. Make sure that the sensor is completely powered down before reconnecting the power supply (Many power supplies store energy and need time to be discharged completely). During the first 5 seconds after the sensor starts up, the serial line settings will remain as 9600, 8, N, 1. After this, the programmed communication parameters will become effective.

   You have 5 seconds time to type: `open<Enter>`

   Make sure that the sensor is already on when you type the first letter. If you do not succeed, try several times and check your connections.
6. After a successful **OPEN** command, the sensor should display a configuration menu. You can now adjust the settings.

Technical Support

For technical questions, contact the Vaisala technical support:

E-mail	helpdesk@vaisala.com
Phone (int.)	+358 9 8949 2789
Fax	+358 9 8949 2790

Return Instructions

If the product needs repair, please follow the instructions below to speed up the process and avoid extra costs.

1. Read the warranty information.
2. Write a Problem Report with the name and contact information of a technically competent person who can provide further information on the problem.
3. On the Problem Report, please explain:
   - What failed (what worked / did not work)?
   - Where did it fail (location and environment)?
   - When did it fail (date, immediately / after a while / periodically / randomly)?
   - How many failed (only one defect / other same or similar defects / several failures in one unit)?
   - What was connected to the product and to which connectors?
   - Input power source type, voltage and list of other items (lighting, heaters, motors etc.) that were connected to the same power output.
   - What was done when the failure was noticed?
4. Include a detailed return address with your preferred shipping method on the Problem Report.
5. Pack the sensor into the original shipping container. The sensor warranty will be void if another packing method is used.

6. Send the box to the nearest Vaisala Service depot:

European Service Center:

Vaisala SSD Service
Vanha Nurmijärventie 21
01670 Vantaa
FINLAND
Phone: +358 9 89492758
Fax: +358 9 89492295
E-mail: ssdservice@vaisala.com
em.customerservice@vaisala.com

American Service Center:

Vaisala Inc.
100 Commerce Way
Woburn MA 01801-1068
USA
Phone: +10888 VAISALA; +1 781 9334500
Fax: +1 781 9338029
E-mail: customersupport@vaisala.com

Asian Service Center:

Vaisala KK
42 Kagurazaka 6-Chome
Shinjuku-ku
Tokyo 162-0825
JAPAN
Phone: +813 32669611
Fax: +813 32669610
E-mail: aftersales.asia@vaisala.com

This page intentionally left blank.

CHAPTER 7

TECHNICAL DATA

Specifications

Table 16 Technical Specifications

Wind Speed	
Measurement range	0 ... 65 m/s (0 ... 144 mph, 0 ... 125 knots)
Starting threshold	virtually zero
Delay distance	virtually zero
Resolution	0.1 m/s (0.1 mph, 0.1 knots, 0.1 km/h)
Accuracy (range 0 ... 65 m/s)	±0.135 m/s (0.3 mph, 0.26 knots) or 3 % of reading, whichever is greater
Wind Direction	
Measurement range	0 ... 360°
Starting threshold	virtually zero
Delay distance	virtually zero
Resolution	1°
Accuracy (wind speed over 1 m/s)	±2°
Outputs	
Digital outputs	
type	RS232, RS422 or RS485, four different message formats
bit rate	adjustable from 1200 to 19200 bit/s
available averages	RS232: 1 to 9 seconds
SDI12- Standard Data Interface	
type	3 wires for ground, signal and supply
bit rate	fixed 1200 bit/s
available averages	1 to 3600 seconds
Analog outputs	
wind speed	
frequency	5 Hz/mph
voltage	8.0 mV/mph
output impedance	10 kohm
wind direction	
simulated potentiometer	0 ...V_{ref} represents 0 ... 359°
reference voltage	1.0 ... 4.0 V

Wind Speed			
output impedance	24 kohm		
Response Characteristics			
Maximum reading rate	1 per second		
Sonic measurement time	0.2 s		
Signal processing time	0.15 s		
Response time	0.35 s		
General			
Operating power supply	10 ...15 VDC, 12mA typical (analog)		
and for heated model	36 VDC ±10 %, 0.7 A		
Operating temperature			
WS425 non-heated	-40 ... +55 °C (-40 ... +131 °F)		
WS425 heated	-55 ... +55 °C (-67 ... +131 °F)		
Material			
body	stainless steel		
sensor arms	stainless steel		
transducer heads	silicone rubber and PVC		
Dimensions	Height	Width	Depth
	355 mm	250 mm	286 mm
	14"	10"	12"
Weight			
WS425 stainless steel	1.7 kg (3.7 lbs)		
Complies with EMC standard EN61326-1:1997 + Am1: 1998; Generic Environment			
Accessories			
Cable supporting analog outputs, 10 m	ZZ45204		
Cable supporting RS-232 outputs, 10 m	ZZ452203		
Cable supporting RS-485/422 outputs, 10 m	010411		
Cable supporting SDI-12 outputs, 10 m	WS425CABSDI		
Adapter for 30 - 35 mm (11/4") diameter vertical tube	WS425FIX30		
Adapter for 60 mm (21/4") diameter vertical tube	WS425FIX60		
Field verifier	WS425VERIFIER		

APPENDIX A

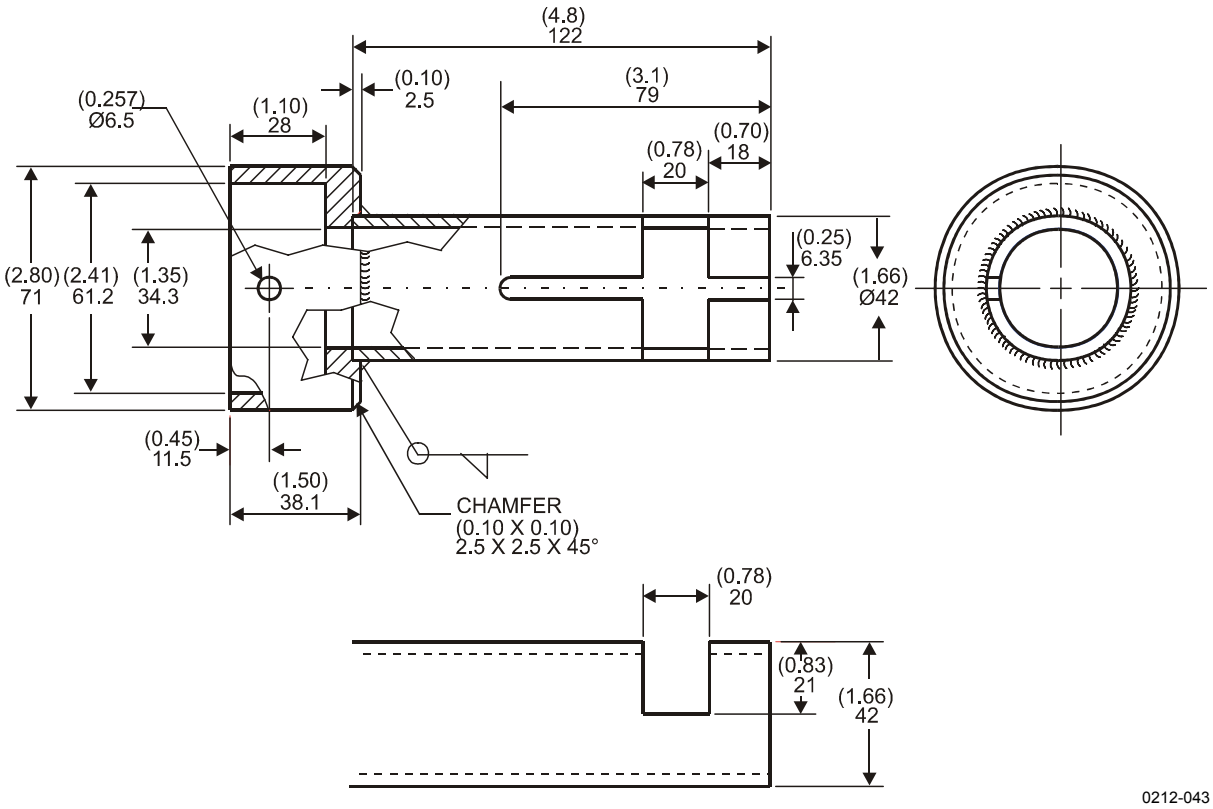

Figure 14 WS425FIX30 Adapter

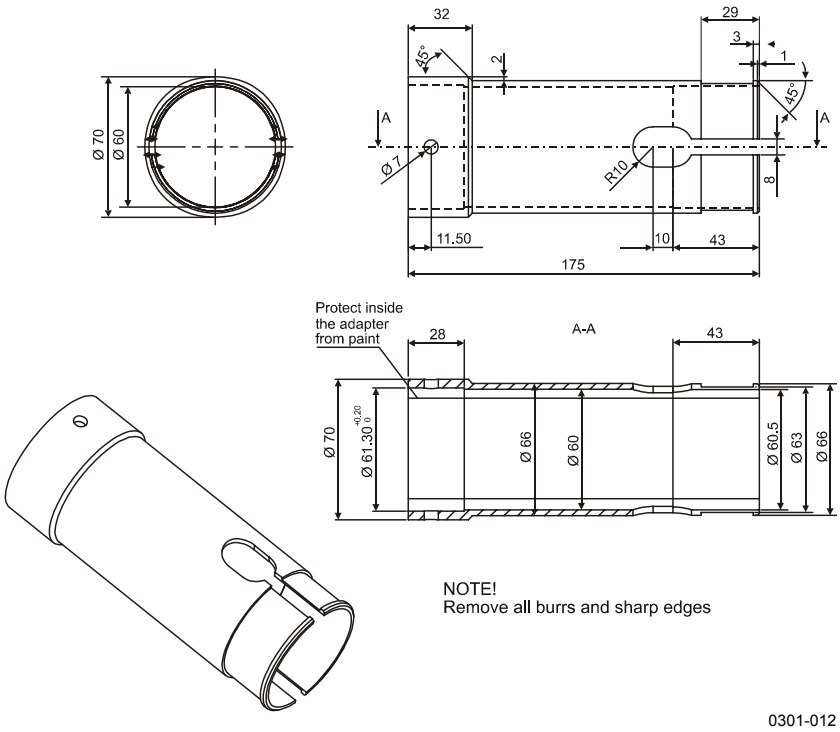

Figure 15 WS425FIX60 Adapter

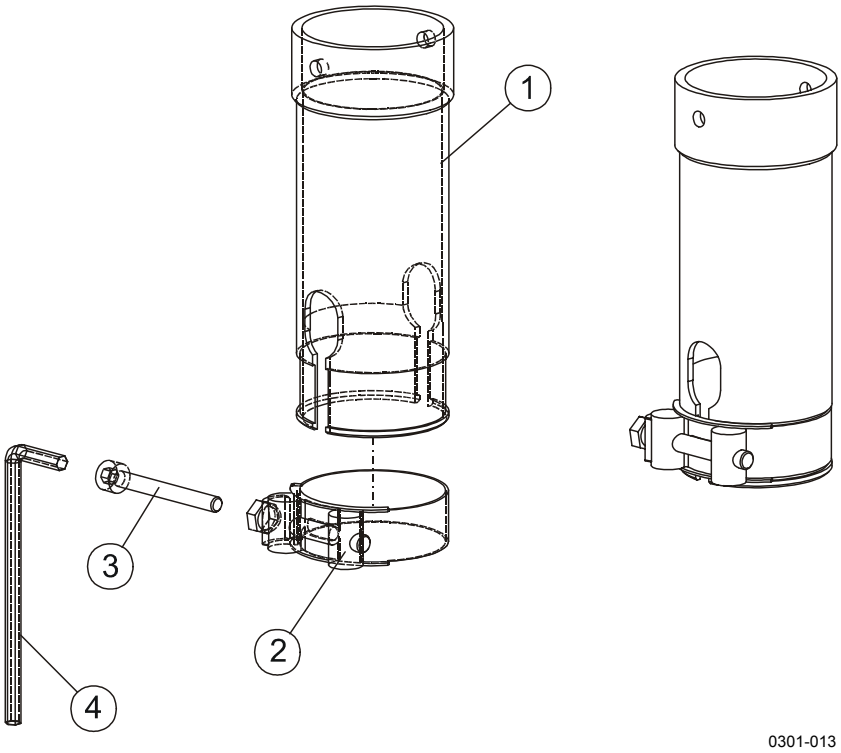

Figure 16 WS425FIX60 Adapter

The following numbers refer to Figure 16 on page 80.

1 = Adapter tube
2 = Fastening clamp
3 = Fastening bolt
4 = Allen key