Aerosol Measurements at the Southern Great Plains Site: Design and Surface Installation

R. Leifer, R. H. Knuth, S. F. Guggenheim, and B. Albert
Environmental Measurements Laboratory, U.S. Department of Energy
New York, New York

To improve the predictive capabilities of the Atmospheric Radiation Measurements (ARM) Program radiation models, measurements of aerosol size distributions, condensation particle concentrations, aerosol scattering coefficients at a number of wavelengths, and the aerosol absorption coeffi-cients are needed at the Southern Great Plains (SGP) site in Lamont, Oklahoma. In addition, continuous measurements of the ozone concentrations are needed for model validation.

The Environmental Measurements Laboratory (EML) has the responsibility to establish the surface aerosol measurements program at the SGP site. To provide representative aerosol measurements at SGP, EML has designed a special sampling manifold. A stainless steel stack with an inlet set at 10 m provides ambient air flow to the aerosol sampling equipment located in a special trailer dedicated to aerosol measurements. The air entering the aerosol instruments is dried by heating to a controlled temperature in order to reduce the relative humidity (RH) of the sample to below 40%. A separate sampling line made of Teflon is mounted next to the stainless steel aerosol sampling stack. This inlet is set at 10 m to provide ambient air to the ozone monitor. ARM's operating protocol requires that all of the observational data be placed online and sent to the main computer facility in real time. To accomplish this goal, a field data ingestor (FDI; Sun Workstation) located in the aerosol trailer will interrogate and control instruments output via RS-232 serial interface ports. In addition, the field data ingestor will sample analog signals and perform control functions.

A major effort was expended in 1994 by EML to develop the drawings and statement of work for the exterior support structure of the aerosol sampling stack. The documents were completed and submitted to the SPG Site Program Manager. In addition, a sampling manifold was built and setup at EML for testing and interfacing to the FDI. A new three-wavelength nephelometer (λ = 450, 550, 700 nm) with backscatter capability (90° to 170°) was purchased in 1994 from TSI, Inc., and was tested and incorporated into the existing aerosol manifold. The specifications for this instrument and its integration into the manifold are shown in Table 1 and Figure 1, respectively.

An adjustable RH system is under development at EML (Figure 2) and, together with the three-wavelength nephelometer, will provide a measure of the scattering and backscattering coefficients as a function of RH and wavelength. A second single wavelength (λ= 550 nm) nephelometer (Radiance Research, Inc.) will be operated as a reference in one of the extra isokinetic sampling lines (Figure 1) under dry conditions (RH <40%). The humidifier is based on the research efforts of Dr. Mark Rood of the University of Illinois at Urbana-Champaign.

Acknowledgment

The authors would like to thank the Instrumentation Division for their exceptional work in drafting of the necessary working drawings; construction of the sampling stack, support structure, and various manifold components; and completion of the electrical wiring.

Table 1. Specifications for the three-wavelength integrating nephelometer.	
Aerosol Scattering Coefficient Operating Range:	10^{-7} to 10^{-3} m^{-3}
Sensitivity:	10^{-7} m^{-1}(450 nm, 550 nm) 3 x 10^{-7} m^{-1} (700 nm) at 30 s averaging time. Defined as the standard deviation of the measured aerosol scattering coefficient when sampling filtered, particle free air.
Drift:	<2 x 10^{-7} m^{-1} (30 s average time) for up to 1 h after filtered air reference measurement at 550 nm
Measuring Wavelength:	450 nm, 550 nm, 700 nm, center wavelength (50 nm band width)
Angular Integration:	7° to 170°
Zero Calibration:	particle free air
Zero Calibration Frequency:	user adjustable (1 to 24 h)
Output Analog:	at least 8 channels at 0 to 10 V DC, 0.05% resolution
Output Analog:	eight data channels (aerosol scattering coefficients, Rayleigh corrected, backs-cattering coefficient for 3 wavelengths); separate pressure temperature and RH channels.
Output Serial:	instrument operating parameters, date (dd, mm, yy), time (h, min), Rayleigh corrected aerosol scattering (σ_{sp}, $\sigma_{bsp,}$ at 450 nm, 550 nm and 700 nm), pressure, temperature, RH, status
Backscatter Shutter:	changes angular integration from 7° to 170° to 90° to 170°
Backscatter Sensitivity:	10^{-7} m^{-1} (450 nm, 550 nm, 700 nm) at 1 min averaging time.
Instrument Operating Temperature Range: Power requirements:	5°C to 35°C 120 VAC 60 counts

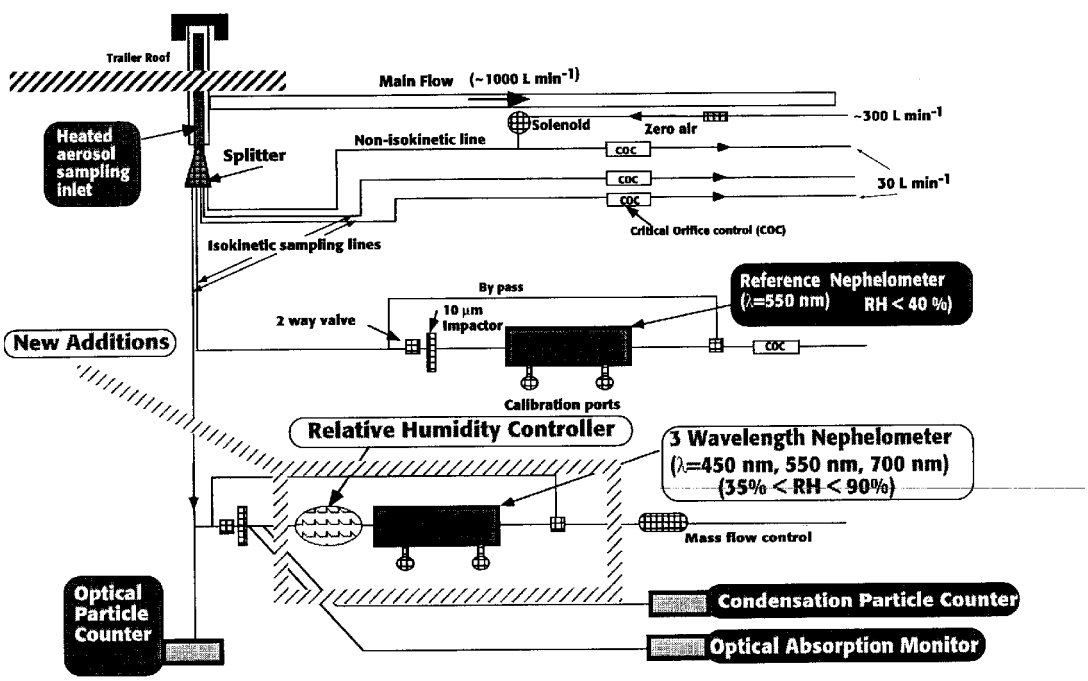

Figure 1. The SGP site aerosol sampling manifold, including the new additions to the system.

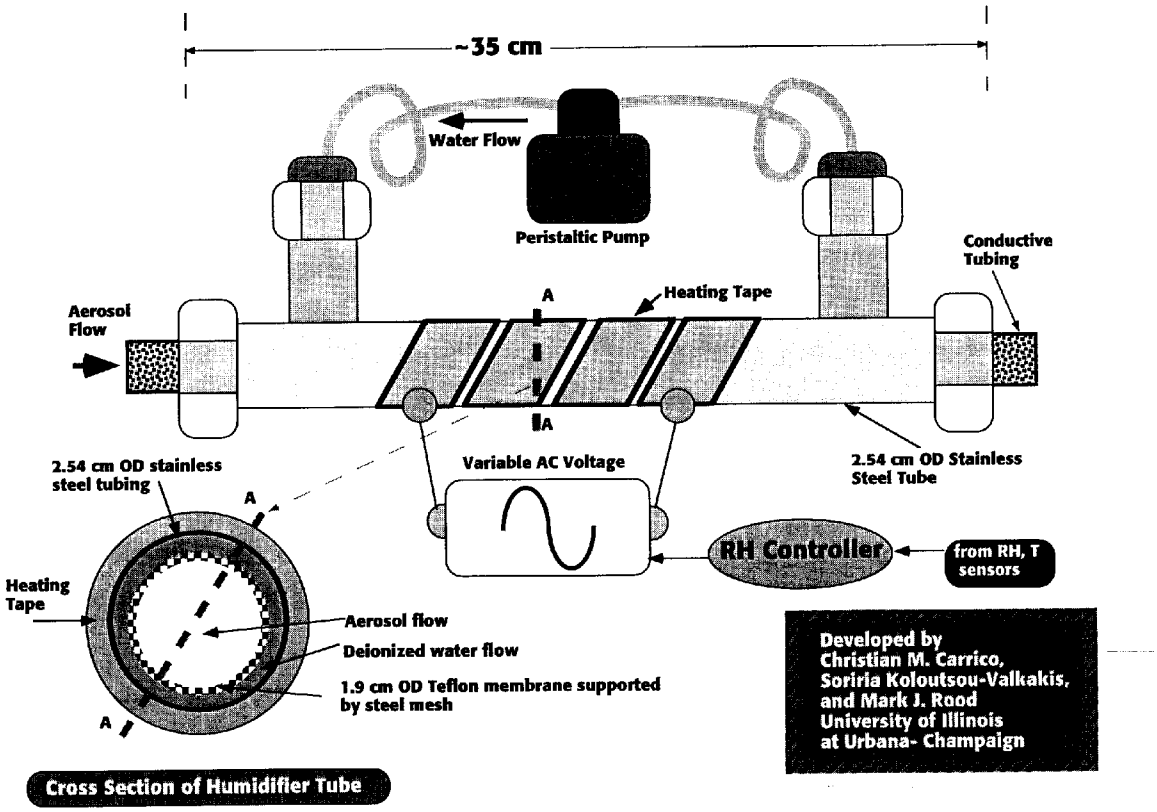

Figure 2. Schematic of the humidifier used to vary the relative humidity of the dried ambient aerosol entering the three-wavelength nephelometer. Based on the research efforts of Dr. Mark Rood of the University of Illinois of Urban, Champaign.